World Meteorological Organization

COMMISSION FOR INSTRUMENTS AND METHODS OF OBSERVATION

Seventeenth Session
Amsterdam, the Netherlands, 12 to 16 October 2018

CIMO-17 / INF. 1(1)
Submitted by:
Secretary-General
2.VIII.2018

MATERIAL ARRANGEMENTS FOR THE SESSION

Venue

At the kind invitation of the Government of the Netherlands, the seventeenth session of the Commission for Instruments and Methods of Observation (CIMO-17) will be held in Amsterdam, the Netherlands from 12 to 16 October 2018. The opening ceremony will be held at 9.30 a.m. on 12 October 2018 at the RAI Amsterdam Convention Centre (website).

The Technical Conference (TECO) will be held at the same venue from 8 to 11 October 2018.

Working languages

During the session, simultaneous interpretation in the six WMO official languages (Arabic, Chinese, English, French, Russian and Spanish) will be provided in the main conference room. Additional meeting rooms without interpretation facilities will also be available.

The TECO meeting will be in English only.

Documents

Delegations wishing to submit documents before the session are invited to send them to the WMO Secretariat, as soon as possible but not later than 60 days before the opening of the session, in accordance with the provisions of Regulation 190(b) of the WMO General Regulations to allow time for translation. According to Regulation 189 of the WMO General Regulations, session documents should be distributed as soon as possible and preferably not later than 45 days before the opening of the session. Any document presented by a delegation should be submitted in the name of the Member of the Organization and not by an individual person.

Processes and documents workflow

The presentation of session documents and organization of the work of the session will differ this year from the practice of previous sessions, as explained at the CIMO-17 website. See document CIMO-17/INF. 1(2).

Distribution of documents

Documents will be posted before and during the session on the session website, in line with WMO greening efforts to promote paper-smart meetings. Therefore, participants are kindly invited to bring internet-enabled portable computers capable of handling Microsoft Word 2010 and Adobe PDF formats so that they can work in paper-smart mode during the session.

Provisional abridged report

Approved documents showing amendments in all languages will be posted as soon as possible after the session on the CIMO-17 website in the folder “Provisional Final Report”.

Registration of participants

Online pre-registration is required for all participants to the session. In view of their official status with WMO, Permanent Representatives of WMO Members (PRs) have been given access to an online Event Registration System allowing the pre-registration of their respective delegations.

More information concerning online pre-registration will be provided in due course on the CIMO-17 website.

A conference information and registration desk will be set up close to the meeting rooms to facilitate the registration of participants and provision of general information.

Registration for the seventeenth session of the Commission for Instruments and Methods of Observation will take place at the conference information and registration desk at the RAI Amsterdam Convention Centre and start on 11 October 2018, from 4 to 6 p.m. It will continue throughout the session. At the time of registration, participants will receive identification badges, which should be worn throughout the session.

Credentials

Pursuant to Regulation 21 of the General Regulations, prior to a session of a constituent body other than the Executive Council, each Member should, if possible, communicate to the Secretary-General the names of the persons composing the delegation to that body, indicating which of these shall be regarded as its principal delegate. In addition, a letter giving these particulars and signed by, or on behalf of, an appropriate governmental authority of the Member shall be sent to the Secretary-General or handed to his representative at the session. This letter shall be regarded as appropriate credentials for the participation of the individuals named therein in all activities of the constituent body.

Representatives of international organizations invited as observers to the session should provide in advance, or bring to the session, a letter of representation signed by the appropriate authority from their organization.

List of participants

A provisional list of participants will be uploaded on the session website shortly after the beginning of the meeting. This list will be updated on a daily basis.

Videoconference facilities

A videoconference connection will be set up, if possible, between the main meeting room and WMO headquarters in Geneva.

Internet facilities

Wireless Internet connection will be available in the main conference room and at the RAI Amsterdam Convention Centre.

Entry requirements

All participants requiring a visa to enter the Netherlands should make their visa applications directly to the nearest embassy or consulate of the Netherlands, submitting invitation letters issued by the local organizing committee, together with other required documents, although holders of Diplomatic, Service, Official or specified passports from some countries may not require a visa by virtue of bilateral agreements. A short-stay Schengen visa might be needed for the Netherlands:

- Detailed information on Immigration Facilities (incl. visa application) in different countries is available on the website of the Ministry of Foreign Affairs of the Netherlands;

- A list of countries and language used for providing the visa information can be found on this website (click on the language given).

If a letter of invitation is necessary for your visa application, please fill in the form in Appendix (available in English only) and return to the local organizing committee (LOC), together with the information page of the passport, at the following e-mail address (ultimately two weeks before the visa application is required to be started):

Mr Hans Roozekrans
KNMI, International Affairs Coordinator
E-mail: Hans.Roozekrans@knmi.nl (please copy: Marion.Bogers-Pettinga@knmi.nl)

Transportation

Participants are recommended to arrive at the Amsterdam Airport Schiphol (website: https://www.schiphol.nl/en/), where major companies operate daily flights as destination. A guide for local transportation is provided through this link.

Currency

Currency exchange services are available at Amsterdam Airport Schiphol as well as in various currency exchange offices throughout Amsterdam (opening hours are from as early as 7.30 a.m. to as late as 11 p.m., depending on the office). The local currency is the Euro (EUR). Most businesses, tour operators, airlines and hotels accept major credit cards and American Express traveller's checks. The average exchange rate in EUR is as follows:

1 USD = 0.86 EUR
1 CHF = 0.87 EUR

Health requirements / medical services

Up-to-date information on international travel and health requirements are provided by the World Health Organization (WHO) at the following websites:

http://www.who.int/ith/en/
http://www.who.int/countries/nld/en/

It is suggested that you take out personal medical insurance for the duration of the trip.

Electricity and mobile phone connection

Power systems are generally 230 volts and 50 Hz. An adaptor may be necessary.

SIM cards for mobile phones are available. For more details, please visit the websites of the Dutch mobile phone operators, or contact your local service operator.

Local climate in October

Climate data during October in Amsterdam are listed below:

Mean temperature	11°C
Mean maximum temperature	15°C
Mean minimum temperature	8°C
Mean relative humidity	85%
Mean precipitation	84 mm
Mean number of days with precipitation ≥1 mm	9 days
Mean duration of sunshine	3 h/day

Updated weather information can be found on KNMI website (http://www.knmi.nl/home).

Hotel reservation/Tourism

Amsterdam Tourism office website provides a large choice of hotels, in addition to those that can be found through various online providers of accommodation. Please note that there will be no shuttle service provided.

If you wish to make the most of your time in Amsterdam you can order the "I amsterdam City Card", and enjoy free entrance to many of the city's top museums and attractions. Its advantage is an unlimited access to the city's public transportation system for the duration of your card, from 24 to 96 hours.

Information and contact details of the local organizing committee (LOC)

For any further information please contact the LOC at the following address:
Local coordinator for CIMO-17:

Mr Marijn de Haij
KNMI, R&D Observations & Data Technology
PO Box 201 | 3730 AE | De Bilt | The Netherlands
Email: Marijn.de.Haij@knmi.nl

_____

APPENDIX:
VISA APPLICATION FORM

1. First Name:.....Middle Name:.....Family Name:.....
2. Gender (please tick): ☐ Male ☐ Female
3. Title: Dr/Prof/Mr/Ms/Mrs/Miss/Other (please underline or tick)
4. WMO Member you are representing:.....
   Or, other (please specify).....
5. Present Position or Occupation:.....
6. Organization:.....
7. Tel.:.....Fax:.....Mobile:.....
   E-mail Address:.....
8. Intention to participate in: ☐ CIMO-17 ☐ CIMO TECO 2018
9. Date and Place of Birth:.....
10. Nationality:.....
11. Passport Number, Place and Date of Issue:.....
    .....
12. Passport Expiry Date: .....
13. Place of the Embassy/Consulate/Visa Office of the Netherlands where you wish to apply for the visa:.....
14. Address during the stay (please tick): .....

If a letter of invitation is necessary for your visa application, please fill in this form and return it to the local organizing committee (LOC), together with the information page of the passport, at the following E-mail address (ultimately two weeks before the visa application is required to be started):

Mr Hans Roozekrans
KNMI, International Affairs Coordinator
E-mail: Hans.Roozekrans@knmi.nl
Copy to: Marion.Bogers-Pettinga@knmi.nl

_____

World Meteorological Organization

COMMISSION FOR INSTRUMENTS AND METHODS OF OBSERVATION

Seventeenth Session
Amsterdam, the Netherlands, 12 to 16 October 2018

CIMO-17/INF. 1(2)
Submitted by:
Secretary-General
22.VI.2018

DOCUMENT PROCESSING FOR THE SEVENTEENTH SESSION OF THE COMMISSION FOR INSTRUMENTS AND METHODS OF OBSERVATION (CIMO-17)

Document types for the seventeenth session of the CIMO-17

(1) CIMO-17 will use two types of documents:

- **Doc.** (documents) whose contents are listed below; these will appear in the final report;

- **INF.** (information) papers, which provide additional information relevant to the decisions/recommendations/resolutions adopted at the meeting; these will appear only in Part II of the report.

(2) The first type of document (**Doc.**) will consist of up to three parts, and every document will contain at least one resolution and/or one decision and/or one recommendation:

(a) **Resolutions** (optional) are decisions of CIMO that concern only the internal activities of the Commission, such as actions to carry out its part of the strategic programme of the Organization, the establishment and terms of reference of a working group or the designation of a rapporteur, in line with General Regulation 182(b);

(b) **Decisions** (optional) place on record instructions/directives to the Management Group from CIMO, Congress or EC resolutions or decisions, or provide records of CIMO opinions/observations on a specific topic, procedural decisions and other decisions pertaining to the internal matters of CIMO, in line with General Regulation 182(c);

The decision justification (optional) is additional information that is essential to support the decision being made. This should be short and should refer, as far as possible, to pre-existing documents. This part of the document will appear in the final report immediately after the corresponding decision.

(c) **Recommendations to Congress or the Executive Council** (optional) are decisions of CIMO requiring financial support or implementation by Members, proposals for Secretariat action or requiring coordination with other WMO bodies or with bodies outside the Organization, in line with General Regulation 182(a);

Document processing

(3) The first version (DRAFT 1) of documents will be published on the CIMO-17 website, and members of the Commission will be invited to send suggestions for improving the document to the Secretariat (cimo17.plenary@wmo.int). These proposals will be assessed and the second draft (DRAFT 2) will be posted on the CIMO-17 website. These documents will be available in all six WMO official languages.

(4) Information documents will be posted on the CIMO-17 website, but are not intended for amendment or discussion. These will normally be available in English only.

(5) During the session, the chair for an agenda item will lead the discussion on the documents for that item. Within a document, each decision will be discussed separately. In many cases each component of that decision, such as related annexes, will be discussed individually. Following current practice, component parts of a document may be approved by the session while other components may still need additional debate. Documents amended during the session will be posted successively as DRAFT 2, DRAFT 3, and so forth, and the final approved version will be marked APPROVED.

(6) Discussion of the document may end in two ways. The complete document may be approved, in which case any agreed changes to the document will be included and the approved version will be published on the CIMO-17 website in the "PROVISIONAL REPORT" folder. Alternatively, the chair of the session may decide that no further progress can be made with the document at that time, in which case changes to the document will be included in the next draft, and the modified document will be published on the CIMO-17 website in the "DRAFTS FOR DISCUSSION" folder. This will be published as the next draft in the sequence (DRAFT 2, DRAFT 3, and so forth), whereas the previous draft will be moved to the "SESSION ARCHIVE" folder.

(7) Versions of documents created during the session will be available in English only, on the understanding that the revised texts will be read out clearly, with interpretation in all WMO official languages.

Post-session publication

(8) Approved documents from the session will be translated into all six WMO official languages and placed on the CIMO-17 website in the "PROVISIONAL REPORT (Approved documents)" folder.

(9) The approved documents, the agenda and the list of participants will be combined to form the abridged report of the session, which will be edited and published in the six WMO official languages. A second part of the report, consisting of information documents will also be published, in English only.

_____

World Meteorological Organization

COMMISSION FOR INSTRUMENTS AND METHODS OF OBSERVATION

Seventeenth Session
Amsterdam, the Netherlands, 12 to 16 October, 2018

CIMO-17/INF. 1(3)
Submitted by:
Secretary-General
22.VI.2018

PROVISIONAL ANNOTATED AGENDA

1. ORGANIZATION OF THE SESSION

1.1 Opening of the session

The seventeenth session of the Commission for Instruments and Methods of Observation (CIMO) will be held in Amsterdam, the Netherlands, from 12 to 16 October 2018. The opening ceremony will take place at 9.30 a.m. on 12 October 2018. Information on material arrangements for the session is provided in CIMO-17/INF. 1(1). The opening ceremony will be initiated by the Government of the Netherlands, followed by welcome addresses from the president of CIMO and the Secretary-General of WMO or his representative.

Plenary sessions of the Commission, with full language interpretation, will start on 12 October 2018 and are expected to finish by 5.30 p.m. on 16 October 2018.

The session will be preceded by the CIMO Technical Conference on Meteorological and Environmental Instruments and Methods of Observation (CIMO TECO 2018), which will take place from 8 to 11 October 2018 at Hall 8 of the RAI Amsterdam Convention Centre. CIMO TECO 2018 will be held together with the Meteorological Technology World Expo 2018 (9-11 October), the second International Forum of Users of Satellite Data Telecommunication Systems (9-11 October) and the WMO Weather Enterprise Conference (11-12 October).

1.2 Consideration of the report on credentials

A list of the representatives attending the session will be made available, as soon as possible after the opening of the session, pursuant to General Regulations 21 to 24. This list will be based on the credentials received by the Secretary-General of WMO and those handed to the representative of the Secretary-General of WMO at the session.

1.3 Adoption of the agenda

In accordance with General Regulation 193, the provisional agenda will be submitted for approval by the Commission as soon as possible after the opening of the session and may be amended at any time during the course of the session.

Additional items for the agenda may be forwarded by Members/Member States to the Secretariat before the session, but preferably not later than thirty days before the opening of the session. Explanatory memoranda should accompany such proposals.

Working papers submitted by Members/Member States on items on the provisional agenda should be provided to the Secretariat as early as possible, but preferably not later than sixty days before the opening of the session, as per Regulation 190.

Participants will be invited to consider and adopt this provisional agenda, which in accordance with Regulation 191 includes items that are normally included in a provisional agenda, as well as any items submitted by the President of WMO, the Executive Council of WMO, other technical commissions, associations, committees, the United Nations and Members/Member States.

1.4 Establishment of committees

In accordance with Regulations 23 to 32, the session may wish to establish a Credentials Committee, a Nomination Committee, a Drafting Committee, a Coordination Committee and other committees, as it deems necessary.

The Commission will decide when dealing with item 1.4 whether or not a Credentials Committee should be established.

To ensure proper coordination of the activities of the session, the Commission may set up a Coordination Committee, according to Regulations 25 and 29.

The technical work of the session will be carried out in Plenary, chaired by the president. The Commission may wish to appoint additional experts to support the president as chairs for specific technical agenda items.

1.5 Other organizational matters

The Commission will agree upon:

(a) working hours of the meetings: 9.30 a.m. – 12.30 p.m. and 2.30 p.m. – 5.30 p.m.;

(b) tentative programme of work for the session.

All the documents required for the CIMO-17 session will be made available on the CIMO-17 website at http://meetings.wmo.int/CIMO-17. To reduce the carbon footprint of the session, no hard copies of the documents will be made. Participants are encouraged to work with electronic documents.

2. REPORT ON THE ACTIVITIES OF THE COMMISSION

2.1 Report of the president of the Commission

The Commission will be informed of the key activities of the Commission since its last session (St Petersburg, Russian Federation, 2014), actions taken by the president in support of the WMO high priority activities, crosscutting activities and inter-commission actions that emerged during the intersessional period, and proposals for future directions in the next intersessional period.

It will also be informed of the key outcomes of TECO-2018 and may wish to make decisions arising from these matters.

The Commission will be invited to discuss key points from the report of the president and to defer any points requiring detailed study or subsequent action by the Commission to the appropriate agenda items.

2.2 Report by OPAG Chairs and Focal Points

The Commission will be informed of the activities and achievements of the three CIMO Open Programme Area Groups (OPAGs) and of the Focal Points, including the outputs and outcomes of the various expert and task teams, and theme leaders. It will be informed of the achievements of the CIMO Testbeds and Lead Centres, and of the designation by the president of new CIMO Testbeds and Lead Centres.

2.3 Decisions and recommendations arising from the work of the Commission

The Commission will be invited to discuss specific matters arising from the work of the Commission since CIMO-16 and to make decisions in regard to the outcome of specific activities. Among others, the Commission will be invited to approve the provisional 2018 Edition of the Guide to Meteorological Instruments and Methods of Observation, proposed updated Terms of Reference for Regional Instrument Centres (RIC) as well as recommending governance procedures for RICs, and for the World Infrared Standard Group. It will also be invited to approve a new classification scheme on Initial and Ongoing Surface Measurement Quality.

3. STRATEGIC CONTEXT

3.1 WMO strategic planning

The Commission will be informed of recent progress by the Executive Council Working Group on Strategic and Operational Planning in drafting the WMO Strategic Plan for the 2020-2023 period, and the main implications of the draft plan for the Commission's future work priorities.

The Commission will also be informed of recent developments in planning for a reorganization of the WMO technical commission structure after the eighteenth session of the WMO Congress, in 2019. The Commission will be invited to discuss the implications of this structural change for CIMO.

3.2 CIMO relationship with other WMO activities

The Commission will be informed about the development of relevant WMO priority activities and other WMO programmes. In particular, the Commission will be informed about the development of the WMO Integrated Global Observing System (WIGOS), the WMO Information System (WIS), the Global Framework for Climate Services (GFCS), Disaster Risk Reduction (DRR), and the Global Cryosphere Watch (GCW). The Commission will also be informed about proposals for collaboration linked to or emanating from other Technical Commissions and Regional Associations.

The Commission will be invited to discuss its participation in these activities and to consider proposed actions and recommendations for its contributions and support to these activities and programmes and need for strengthening collaboration with other WMO programmes and regions.

3.3 Collaboration with relevant international organizations

The Commission will be invited to review the collaboration between the International Organization of Standardization (ISO), the International Committee for Weights and Measures (CIPM) and WMO in the area of standardization of meteorological instruments and methods of observation, as well as in the field of calibration standards and methods. The Commission will also be invited to review its collaboration with the Association of the Hydro-Meteorological Equipment Industry (HMEI).

The Commission will be invited to consider its participation in specific activities carried out in collaboration with these organizations and proposed actions and recommendations needed for supporting these activities, such as the development of common WMO-ISO standards, and the generic tender specification project initiated by HMEI and further developed in collaboration with the World Bank and WMO.

3.4 Vision for the future of environmental measurements

The Commission will review the draft Vision for the future of environmental measurements in the context of the proposed WMO Strategic Plan for 2020 to 2023 and other WMO policy documents to ensure that the Vision is aligned with future WMO strategies. It will then be invited to adopt the vision and use it as a guiding principle to prioritize its activities. Based on this review and discussions, the Commission will update its strategic direction and proposed structure.

4. FUTURE WORKING STRUCTURE AND WORK OF THE COMMISSION

4.1 Priority activities

Based on the previous documents and discussions, the Commission will be invited to identify key areas for future work by the Commission.

4.2 Working structure

Based on the previous documents and discussions, the Commission will review and decide on a new CIMO working structure.

The Commission will review the process used for the nomination of experts. It will appoint relevant experts to comprise the management group, with due consideration for regional and gender balance and it will decide on their terms of reference for the intersessional period.

The Commission will discuss and approve the working structure which will include the establishment of expert teams, task teams, and theme leaders, and it will designate their respective leaders. In order to increase the efficiency of the Commission, the session will consider new working arrangements that will enable improved regional and gender balance across each priority area. The Commission will also be invited to endorse Inter-Programme Expert Teams with other technical commissions.

5. REVIEW OF PREVIOUS RESOLUTIONS AND RECOMMENDATIONS OF THE COMMISSION AND OF RELEVANT RESOLUTIONS OF THE EXECUTIVE COUNCIL

The Commission will be informed of the previous Decisions of Congress and the Executive Council relevant to the Commission.

The Commission will review its resolutions and recommendations from CIMO-16, and from previous sessions, in light of progress during the intersessional period, and decide which of them should remain in force, taking into account relevant resolutions and decisions of the World Meteorological Congress and Executive Council. The Commission may make recommendations to the Executive Council and Congress, as appropriate.

Proposals for any specific amendments to the Technical Regulations (including its annexes), submitted by the Expert Teams or by Members at the session, will be considered by the Commission.

6. ELECTION OF OFFICERS

The Commission shall elect a president and vice-president, to hold office until the end of the next Commission session. Details regarding eligibility and procedures for election are given in Regulations 11, 27, 57-65, 80-90 and 183 of the WMO General Regulations and Resolution 37 (Cg-XI).

7. DATE AND PLACE OF THE EIGHTEENTH SESSION

The Commission will decide where and when to conduct its eighteenth session.

8. CLOSURE OF THE SESSION

The seventeenth session of the Commission for Instruments and Methods of Observation is scheduled to close by 5.30 p.m. on 16 October 2018.

_____

جدول الأعمال المؤقت المشروح

1 تنظيم الدورة

1.1 افتتاح الدورة

ستُعقد الدورة السابعة عشرة للجنة أدوات وطرق الرصد (CIMO) في أمستردام، هولندا، في الفترة 12-16 تشرين الأول/ أكتوبر 2018. وسيُقام حفل الافتتاح في 12 تشرين الأول/ أكتوبر 2018، الساعة 09:30. وترد معلومات عن الترتيبات المادية للدورة في الوثيقة CIMO-17/INF. 1(1). وسترأس حكومة هولندا الحفل الافتتاحي للدورة، ويعقب ذلك كلمة ترحيب من رئيس اللجنة (CIMO)، ثم كلمة الأمين العام للمنظمة (WMO) أو ممثله.

وستبدأ الجلسات العامة للجنة (CIMO)، مع توفير خدمات الترجمة الفورية بجميع اللغات، في 12 تشرين الأول/ أكتوبر 2018، ويُتوقع أن تنتهي في 16 تشرين الأول/ أكتوبر 2018، الساعة 17:30.

وسيسبق الدورة المؤتمر الفني للجنة (CIMO) بشأن أدوات وطرق رصد الأحوال الجوية والبيئية (CIMO TECO 2018)، الذي سيُعقد في الفترة 8-11 تشرين الأول/ أكتوبر 2018، في الصالة 8 بمركز المؤتمرات RAI Amsterdam Convention Centre. وسيُعقد المؤتمر الفني للجنة (CIMO TECO 2018) إلى جانب المعرض التكنولوجي العالمي للأرصاد الجوية لعام 2018 (9-11 تشرين الأول/ أكتوبر)، والمنتدى العالمي الثاني لمستخدمي النظم الساتلية لنقل البيانات (9-11 تشرين الأول/ أكتوبر)، ومؤتمر مشروع الطقس للمنظمة (WMO) (11-12 تشرين الأول/ أكتوبر).

1.2 النظر في التقرير الخاص بأوراق الاعتماد

وفقاً للمواد 21 إلى 24 من اللائحة العامة، ستتاح قائمة بأسماء الممثلين الحاضرين، في أقرب وقت ممكن بعد افتتاح الدورة. وستُعد هذه القائمة على أساس أوراق الاعتماد التي يتلقاها الأمين العام قبل انعقاد الدورة وتلك التي تُسلم إلى ممثله في الدورة.

1.3 إقرار جدول الأعمال

طبقاً للمادة 193 من اللائحة العامة، سيُعرض جدول الأعمال المؤقت على اللجنة لإقراره في أقرب وقت ممكن بعد افتتاح الدورة، ويجوز تعديله في أي وقت في أثناء الدورة.

ويجوز للأعضاء/ الدول الأعضاء أن تحيل إلى الأمانة قبل الدورة بنوداً إضافية لجدول الأعمال، ويفضل أن يتم ذلك قبل افتتاح الدورة بثلاثين يوماً على الأقل. وينبغي أن تكون هذه المقترحات مصحوبة بمذكرات توضيحية.

أما وثائق العمل التي يقدمها الأعضاء/ الدول الأعضاء بشأن البنود المدرجة في جدول الأعمال المؤقت فينبغي تقديمها إلى الأمانة في أبكر وقت ممكن، ويُفضل أن يتم ذلك قبل افتتاح الدورة بستين يوماً، وفقاً للمادة 190.

وسيُدعى المشاركون إلى النظر في جدول الأعمال المؤقت وإقراره، وهو يشمل عادة، وفقاً للمادة 191، بنوداً ترد في أي جدول أعمال مؤقت، فضلاً عن أي بنود يقدمها رئيس المنظمة (WMO)، والمجلس التنفيذي للمنظمة (WMO)، واللجان الفنية والاتحادات واللجان الأخرى، والأمم المتحدة، والأعضاء/ الدول الأعضاء.

1.4 إنشاء اللجان

طبقاً للمواد 23 إلى 32، يجوز للدورة أن تنشئ لجنة لأوراق الاعتماد ولجنة ترشيحات ولجنة صياغة ولجنة تنسيق وأي لجان أخرى ترى لزوماً لها.

وستبت اللجنة، عند تناولها للبند 1.4 من جدول الأعمال، فيما إذا كان ينبغي أم لا إنشاء لجنة لأوراق الاعتماد.

ولضمان تنسيق أنشطة الدورة تنسيقاً سليماً، قد تنشئ اللجنة (CIMO) لجنة للتنسيق وفقاً للمادتين 25 و29 من اللائحة العامة.

وستجري الأعمال الفنية للدورة في جلسات عامة يرأسها رئيس اللجنة (CIMO). ويجوز أن تعين اللجنة خبراء إضافيين للعمل كرؤساء لبنود فنية محددة من جدول الأعمال، دعماً الرئيس.

1.5 المسائل التنظيمية الأخرى

ستوافق اللجنة على ما يلي:

(أ) مواعيد عمل الجلسات: 09:30 – 12:30 و14:30 – 17:30؛

(ب) برنامج العمل المؤقت للدورة.

وستوفر كافة الوثائق اللازمة للدورة السابعة عشرة للجنة (CIMO) على الموقع الشبكي للدورة: http://meetings.wmo.int/CIMO-17. وللحد من أثر الكربون الناجم عن الدورة، لن توفر نسخ ورقية من الوثائق. ونشجع المشاركين على استخدام الوثائق الإلكترونية.

2. تقرير بشأن أنشطة اللجنة

2.1 تقرير رئيس اللجنة

ستُحاط اللجنة علماً بأنشطتها الرئيسية المضطلع بها منذ دورتها الأخيرة (سان بطرسبرغ، الاتحاد الروسي، 2014)، والإجراءات التي اتخذها الرئيس لدعم أنشطة المنظمة (WMO) عالية الأولوية، والأنشطة المستعرضة، والإجراءات المشتركة بين اللجان المستجدة خلال فترة ما بين الدورتين، والاقتراحات الخاصة بالتوجهات المقبلة خلال فترة ما بين الدورتين التالية.

وستُحاط اللجنة علماً أيضاً بالنتائج الرئيسية للمؤتمر الفني (TECO-2018)، وربما ترغب في اتخاذ قرارات بناءً على هذه الأمور.

وستُدعى اللجنة إلى مناقشة النقاط الرئيسية الواردة في تقرير الرئيس، وإحالة أي نقاط تتطلب دراسة مفصلة أو اتخاذ إجراء لاحق من جانبها للنظر فيها في إطار البنود الملائمة من جدول الأعمال.

2.2 تقارير رؤساء الأفرقة المفتوحة العضوية المعنية بالمجالات البرنامجية (OPAGs) والمنسقين الوطنيين

ستُحاط اللجنة علماً بأنشطة وإنجازات الأفرقة المفتوحة العضوية الثلاثة التابعة لها والمعنية بمجالات برنامجية (OPAGs) والمنسقين التابعين لها، بما في ذلك مخرجات ونتائج عمل فرق الخبراء والعمل المختلفة ورؤساء المواضيع. كما ستُحاط اللجنة علماً بإنجازات مراكز الاختبار والريادة التابعة لها، وبتسمية رئيس اللجنة (CIMO) لمراكز الاختبار والريادة الجديدة التابعة لها.

2.3 المقررات والتوصيات الناجمة عن عمل اللجنة

ستُدعى اللجنة إلى مناقشة مسائل محددة ناجمة عن عملها منذ دورتها السادسة عشرة، وإلى اتخاذ قرارات بخصوص نتائج أنشطة بعينها. كما ستُدعى اللجنة إلى جملة أمور منها اعتماد *طبعة 2018 المؤقتة لدليل أدوات وطرق رصد الأحوال الجوية*، والاختصاصات المحدثة المقترحة للمراكز الإقليمية للأدوات (RICs) فضلاً عن تقديم توصيات بشأن إجراءات الحوكمة في المراكز (RICs)، والمجموعة المعيارية العالمية للأشعة تحت الحمراء (WISG). وستُدعى أيضاً إلى اعتماد نظام تصنيف جديد بشأن جودة القياسات السطحية الأولية والجارية.

3. السياق الاستراتيجي

3.1 التخطيط الاستراتيجي للمنظمة (WMO)

ستُحاط اللجنة علماً بالتقدم الذي أحرزه مؤخراً الفريق العامل التابع للمجلس التنفيذي والمعني بالتخطيط الإستراتيجي والتشغيلي في إعداد الخطة الإستراتيجية للمنظمة (WMO) للفترة 2020-2023، وبالآثار الرئيسية لمشروع الخطة على أولويات عمل اللجنة.

كما ستُحاط اللجنة علماً بالتطورات الأخيرة في عملية التخطيط لإعادة تنظيم هيكل اللجان الفنية التابعة للمنظمة (WMO) بعد المؤتمر العالمي الثامن عشر في 2019. وستُدعى اللجنة إلى مناقشة تبعات هذا التغيير الهيكلي عليها.

3.2 علاقة اللجنة (CIMO) بأنشطة المنظمة (WMO) الأخرى

ستحاط اللجنة علماً بتطور الأنشطة ذات الأولوية للمنظمة (WMO) وبرامج المنظمة الأخرى ذات الصلة بها. وستُحاط علماً على وجه الخصوص بتطور النظام العالمي المتكامل للرصد التابع للمنظمة (WIGOS)، ونظام معلومات المنظمة (WIS)، والإطار العالمي للخدمات المناخية (GFCS)، والحد من مخاطر الكوارث (DRR)، والمراقبة العالمية للغلاف الجليدي (GCW). كما ستحاط علماً بالمقترحات الخاصة بالتعاون والمتصلة باللجان الفنية والاتحادات الإقليمية، أو الصادرة عنها.

وستدعى اللجنة إلى مناقشة مشاركتها في هذه الأنشطة، والنظر في الإجراءات والتوصيات المقترحة بشأن مساهمتها ودعمها لهذه الأنشطة والبرامج، وضرورة تعزيز التعاون مع برامج المنظمة (WMO) الأخرى والمناطق الأخرى.

3.3 التعاون مع المنظمات الدولية ذات الصلة

ستدعى اللجنة إلى استعراض التعاون القائم بين المنظمة الدولية للتوحيد القياسي (ISO)، واللجنة الدولية للأوزان والمقاييس (CIPM)، والمنظمة (WMO) في مجال التوحيد القياسي لأدوات وطرق رصد الأحوال الجوية، وكذلك في مجال القواعد القياسية للمعايرة وطرق المعايرة. كما ستدعى اللجنة إلى استعراض تعاونها مع رابطة صناعة معدات الأرصاد الجوية الهيدرولوجية (HMEI).

وستدعى اللجنة إلى النظر في مشاركتها في أنشطة محددة يجري الاضطلاع بها بالتعاون مع هذه الهيئات، وفي الإجراءات والتوصيات المقترحة واللازمة لدعم هذه الأنشطة، مثل إعداد معايير مشتركة بين المنظمة الدولية للتوحيد القياسي (ISO)، والمنظمة (WMO)، ومشروع المواصفات العامة للمناقصات الذي استهلته الرابطة (HMEI)، والذي تواصل تطويره بالتعاون مع البنك الدولي والمنظمة (WMO).

3.4 رؤية لمستقبل القياسات البيئية

ستتعرض اللجنة مشروع الرؤية لمستقبل القياسات البيئية، في سياق الخطة الإستراتيجية المقترحة للمنظمة (WMO) للفترة 2020-2023، ووثائق السياسات الأخرى للمنظمة (WMO) للتأكد من أن الرؤية تتماشى مع إستراتيجيات المنظمة

(WMO) في المستقبل. ثم ستُدعى اللجنة إلى اعتماد الرؤية واستخدامها كمبدأ توجيهي لتحديد أولويات أنشطتها. واستناداً إلى هذا الاستعراض وهذه المناقشات، ستحدّث اللجنة توجهها الإستراتيجي وهيكلها المقترح.

4. هيكل العمل المستقبلي وأعمال اللجنة

4.1 الأنشطة ذات الأولوية

استناداً إلى الوثائق والمناقشات السابقة، ستُدعى اللجنة إلى تحديد المجالات الرئيسية لعملها في المستقبل.

4.2 هيكل العمل

استناداً إلى الوثائق والمناقشات السابقة، ستستعرض اللجنة هيكل العمل الجديد الخاص بها، وستتخذ قراراً بشأنه.

وستستعرض اللجنة العملية المستخدمة في تسمية الخبراء، وستعين خبراء مختصين لتشكيل فريق الإدارة، مع إيلاء الاهتمام الواجب للتوازن الإقليمي وبين الجنسين، وستحدد اختصاصاتهم خلال فترة ما بين الدورتين.

وستناقش اللجنة وتعتمد هيكل العمل، الذي يتضمن إنشاء فرق خبراء وفرق عمل ورؤساء مواضيع، وستعين رؤساء لها. وعملاً على زيادة كفاءة اللجنة، ستنظر الدورة في ترتيبات عمل جديدة من شأنها أن تكفل التوازن الإقليمي وبين الجنسين في كل مجالات الأولوية. كما ستُدعى اللجنة إلى اعتماد فرق الخبراء المشتركة بين البرامج واللجان الفنية الأخرى.

5. استعراض القرارات والتوصيات السابقة الصادرة عن اللجنة وقرارات المجلس التنفيذي ذات الصلة

ستُحاط اللجنة علماً بالقرارات السابقة للمؤتمر والمجلس التنفيذي، والتي تخصها

وستستعرض اللجنة قرارات وتوصيات دورتها السادسة عشرة ودوراتها السابقة، في ضوء التقدم المحرز في فترة ما بين الدورتين، وستقرر أيها ينبغي الإبقاء عليه، آخذة في الاعتبار القرارات والمقررات ذات الصلة للمؤتمر العالمي للأرصاد الجوية والمجلس التنفيذي. ويجوز أن تقدم اللجنة توصيات للمجلس التنفيذي والمؤتمر، حسب الاقتضاء.

وستنظر الدورة في الاقتراحات المقدمة من فرق الخبراء أو من الأعضاء في الدورة، بشأن إدخال تعديلات محددة على اللائحة الفنية (بما في ذلك المرفقات).

6. انتخاب أعضاء الجهاز الرئاسي

تنتخب اللجنة رئيساً ونائب رئيس، يتولى كل منهما منصبه حتى نهاية الدورة المقبلة للجنة. وترد في المواد 11، و27، و57-65، و80-90، و183 من اللائحة العامة، وفي القرار (Cg-XI 37)، التفاصيل الخاصة بأهلية الترشح وإجراءات الانتخاب.

7. تاريخ ومكان انعقاد الدورة الثامنة عشرة

ستبت اللجنة في تاريخ ومكان انعقاد دورتها الثامنة عشرة.

8. اختتام الدورة

من المقرر أن تختتم الدورة السابعة عشرة للجنة أدوات وطرق الرصد (CIMO) أعمالها في 16 تشرين الأول/ أكتوبر 2018، الساعة 17:30.

_____

附加说明的临时议程

1. 会议的组织

1.1 会议开幕

仪器和观测方法委员会（CIMO）第十七次届会将于 2018 年 10 月 12 至 16 日在荷兰阿姆斯特丹召开。开幕式将在 2018 年 10 月 12 日上午 9 点半举行。有关会议材料安排的信息见 CIMO-17/INF.1(1)。开幕式上，荷兰政府将宣布届会开幕，随后由 CIMO 主席和 WMO 秘书长或其代表致欢迎辞。

委员会的全会（提供全部语言口译）将于 2018 年 10 月 12 日开始，预计将于 2018 年 10 月 16 日下午 5 点 30 分结束。

届会前将于 2018 年 10 月 8 至 11 日在 RAI 阿姆斯特丹会议中心 8 号厅举行 CIMO 气象和环境仪器与观测方法技术会议（CIMO TECO 2018）。CIMO TECO 2018 将与 2018 年气象技术世界博览会（10 月 9-11 日）、第二届国际卫星资料电信系统用户论坛（10 月 9-11 日）和 WMO 天气事业大会（10 月 11-12 日）一并举行。

1.2 审议证书报告

根据《总则》第 21 至 24 条，与会代表名单将在届会开幕后今早予以提供。此名单将以 WMO 秘书长收到的以及届会期间递交秘书长代表的证书为基础。

1.3 通过议程

根据《总则》第 193 条，临时议程将在会议开幕式后尽早提交委员会批准，并可在届会期间随时修改。

会前会员/会员国可向秘书处提交补充议题，但最好不迟于开会前三十天。此类提议应附解释性备忘录。

根据《总则》第 190 条，会员/会员国就临时议题提交的工作文件应尽早提交秘书处，最好不迟于会议开幕前六十天。

将请与会者审议并通过这项临时议程。根据《总则》第 191 条，其中包括通常列入临时议程的议题，以及 WMO 主席、WMO 执行理事会、其他技术委员会、协会、议事委员会、联合国和会员/会员国提交的任何议题。

1.4 建立委员会

根据《总则》第 23 至 32 条，届会可以设立一个证书委员会、一个提名委员会、一个起草委员会、一个协调委员会和其认为必要的其他委员会。

审议有关议题 1.4 时，委员会将决定是否设立一个证书委员会。

为确保妥善协调届会的活动，委员会可根据《总则》第 25 和 29 条，建立一个“协调委员会”。

届会的技术工作通过全会开展，由主席主持。委员会可任命其他专家就特定的技术议题向会议主席提供支持。

1.5 其它组织性事务

委员会将议定：

(a) 会议的工作时间：上午 9：30 - 下午 12：30 以及下午 2：30 - 下午 5：30；

(b) 届会的临时工作计划。

CIMO-17 届会所需的所有文件将在 CIMO-17 网站 http://meetings.wmo.int/CIMO-17 上公布。为了减少会议的碳足迹，文件不做硬拷贝。鼓励参会者使用电子文档工作。

2. 委员会活动的报告

2.1 委员会主席的报告

本委员会将了解自上次届会(2014 年，俄罗斯联邦圣彼得堡)以来开展的活动、主席为支持 WMO 高度优先活动、交叉性活动和闭会期间出现的跨委员会行动而采取的行动、以及对下一个休会期间未来工作方向的建议。

它还将了解 TECO-2018 的主要成果，并可能希望根据这些事项做出决定。

委员会将应邀对主席报告的要点进行讨论，并对需要委员会详细研究或采取行动的问题则在相关议题下讨论。

2.2 OPAG 主席和联络员的报告

委员会将了解三个 CIMO 开放计划领域组（OPAG）和联络员的活动和成就，包括各专家和任务组以及专题负责人的产出和成果。它将了解 CIMO 测试台和牵头中心的成就，以及新 CIMO 测试台和牵头中心主任的指定。

2.3 委员会工作中产生的决定和建议

委员会将应邀讨论自 CIMO-16 以来委员会工作中产生的具体问题，并就具体活动的成果作出决定。其中，委员会将应邀批准 2018 年版临时“气象仪器和观测方法指南”、对“区域仪器中心”（RIC）职责的拟议更新以及为 RIC 和世界红外标准组推荐治理程序。它还将应邀批准关于最初和现行的“地面测量质量”的新分类方案。

3. 战略背景

3.1 WMO 战略规划

委员会将了解有关执行理事会战略与运行规划工作组关于起草 WMO 2020-2023 年战略计划的最新进展，以及该计划草案对委员会未来工作重点的主要影响。

委员会还将了解 WMO 技术委员会结构在 2019 年 WMO 大会第十八次会议之后重组规划的最新进展。委员会将应邀讨论这一结构变化对 CIMO 的影响。

3.2 CIMO 与其他 WMO 活动的关系

委员会将了解有关 WMO 相关优先活动和其他 WMO 计划的发展信息。委员会将特别了解 WMO 全球综合观测系统（WIGOS）、WMO 信息系统（WIS）、全球气候服务框架（GFCS）、减少灾害风险（DRR）和全球冰冻圈监视网（GCW）的发展。委员会还将了解与其他技术委员会和区域协会有关或由其提出的合作建议。

委员会将应邀讨论其对这些活动的参与，并审议拟参与并支持这些活动和计划的行动和建议以及加强与 WMO 其他计划和各个区域的合作需求。

3.3 与有关国际组织的合作

委员会将应邀回顾国际标准化组织(ISO)、国际度量衡委员会(CIPM)与 WMO 在气象仪器和观测方法标准化领域、以及在检定标准和方法领域的合作。委员会还将应邀回顾其与水文气象设备工业协会（HMEI）的合作。

委员会将应邀审议其参与与这些组织合作开展的具体活动，以及支持这些活动所需的拟议行动和建议，如制定共同的 WMO-ISO 标准、由 HMEI 发起的通用招标规范项目以及进一步发展世界银行和 WMO 之间的合作。

3.4 未来环境测量的愿景

委员会将审查拟议的 2020 至 2023 年 WMO 战略计划和其他 WMO 政策文件，以确保此愿景与 WMO 未来的战略保持一致。它随后将应邀通过愿景，并将其作为确定其优先活动的指导原则。根据这次审查和讨论，委员会将更新其战略方向和提议的结构。

4. 委员会的未来工作结构和工作

4.1 优先活动

基于以往的文件与讨论，委员会将应邀确定本委员会未来工作的的重点领域。

4.2 工作结构

基于以往的文件与讨论，委员会将审查并决定新的 CIMO 工作结构。

委员会将审查用于专家提名的流程。它将任命组成管理组的相关专家，同时适当考虑区域和性别平衡，并将决定他们在休会期间的职责。

委员会将讨论并批准工作结构，其中包括建立专家组、任务组和专题带头人，并指定其各自的领导。为提高委员会的效率，届会将审议新的工作安排，以能改善每个优先领域的区域及性别平衡。委员会还将应邀认同与其他技术委员会的计划间专家组。

5. 审议委员会的以往决议和建议以及执行理事会的相关决议

委员会将了解大会和执行理事会与本委员会相关的以往决定。

委员会将根据闭会期间的进展，审查 CIMO-16 和之前届会的决议和建议，并决定哪些继续生效，同时考虑到世界气象大会和执行委员会的相关决议和决定。委员会可酌情向执行理事会和大会提交建议。

委员会将审议专家组或会员在届会上提出的有关《技术规则》（包括其附件）的具体修订建议。

6. 选举官员

委员会应选出一名主席和一名副主席，任期至委员会下次届会结束。WMO《总则》第 11、27、57-65、80-90 和 185 条以及决议 37（Cg-16)具体规定了竞选资格和程序。

7. 第十八次届会的日期和地点

委员会将决定何时何地举行其第十八次届会。

8. 会议闭幕

仪器和观测方法委员会第十七次届会定于 2018 年 10 月 16 日下午 5 点 30 分闭幕。

————————————

Organisation météorologique mondiale

COMMISSION DES INSTRUMENTS ET DES MÉTHODES D'OBSERVATION

Dix-septième session
Amsterdam, Pays-Bas, 12-16 octobre 2018

CIMO-17/INF. 1(3)
Présenté par:
Secrétaire général
22.VI.2018

ORDRE DU JOUR PROVISOIRE ANNOTÉ

1. ORGANISATION DE LA SESSION

1.1 Ouverture de la session

La Commission des instruments et des méthodes d'observation (CIMO) tiendra sa dix-septième session à Amsterdam, Pays-Bas, du 12 au 16 octobre 2018. Les dispositions d'ordre pratique prises pour la session figurent dans le document CIMO-17/INF. 1(1). Organisée par le gouvernement néerlandais, la cérémonie d'ouverture aura lieu le 12 octobre à 9 h 30. Elle sera suivie d'un discours de bienvenue du président de la CIMO et du Secrétaire général de l'OMM ou bien de son représentant.

Les séances plénières de la Commission, avec interprétation dans les six langues, débuteront le 12 octobre 2018 et devraient s''achever aux alentours de 17 h 30 le 16 octobre 2018.

La session sera précédée par la conférence technique (TECO) de la CIMO, qui aura lieu du 8 au 11 octobre 2018 dans le hall 8 du Centre de convention RAI, parallèlement au salon Meteorological Technology World Expo 2018 (9-11 octobre), au deuxième Forum international d'utilisateurs de systèmes de télécommunication par satellite (SATCOM) (9-11 octobre) et à la conférence de l'OMM sur l'entreprise météorologique mondiale (11 et 12 octobre).

1.2 Examen du rapport sur la vérification des pouvoirs

La liste des participants sera établie dès que possible après l'ouverture de la session, conformément aux règles 21 à 24 du Règlement général, sur la base des pouvoirs reçus par le Secrétaire général de l'OMM et par son représentant à la session.

1.3 Adoption de l'ordre du jour

Conformément à la règle 193 du Règlement général, l'ordre du jour provisoire sera soumis à l'approbation de la Commission dès que possible après la séance d'ouverture et pourra être modifié à tout moment en cours de session.

Les Membres peuvent proposer au Secrétariat, avant la session mais de préférence au moins trente jours avant l'ouverture de celle-ci, l'inscription de points supplémentaires à l'ordre du jour, en joignant un mémoire explicatif.

Les Membres qui proposeront l'inscription de points supplémentaires devront aussi fournir au Secrétariat les documents de travail correspondants, et ce le plus tôt possible et de préférence au moins soixante jours avant l'ouverture de la session, comme le dispose la règle 190 du Règlement général.

Les participants seront invités à examiner et adopter l'ordre du jour provisoire qui, comme le stipule la règle 191, comporte les questions qui en font normalement partie, ainsi que toute autre question que pourraient soumettre le Président de l'OMM, le Conseil exécutif de l'OMM, d'autres commissions techniques, les conseils, les comités, l'Organisation des Nations Unies et les Membres.

1.4 Établissement de comités

Conformément aux règles 23 à 32 du Règlement général, la Commission voudra peut-être établir un comité de vérification des pouvoirs, un comité des nominations, un comité de rédaction, un comité de coordination et d'autres comités, selon ce qu'elle juge nécessaire.

Elle décidera notamment, lorsqu'elle abordera le point 1.4, s'il convient ou non de créer un comité de vérification des pouvoirs.

Afin d'assurer la bonne coordination des travaux de la session, la Commission peut choisir de constituer un comité de coordination, conformément aux règles 25 et 29 du Règlement général.

Les travaux de la session se dérouleront en séances plénières sous les auspices du président de la Commission. Celle-ci voudra peut-être nommer des experts supplémentaires chargés de seconder le président pour certains points techniques de l'ordre du jour.

1.5 Autres questions d'organisation

La Commission se mettra d'accord sur:

a) L'horaire des séances: 9 h 30 – 12 h 30 et 14 h 30 – 17 h 30;

b) Le programme de travail provisoire de la session.

Tous les documents requis pour la dix-septième session de la CIMO seront diffusés sur le site Web de celle-ci à l'adresse http://meetings.wmo.int/CIMO-17. Pour réduire l'empreinte carbone de la session, les documents ne seront pas disponibles en version papier, les participants étant invités à utiliser des supports électroniques.

2. RAPPORT SUR LES ACTIVITÉS DE LA COMMISSION

2.1 Rapport du président de la Commission

La Commission sera informée des activités principales menées par la Commission depuis sa dernière session (Saint-Pétersbourg, Fédération de Russie, 2014), des mesures prises par le président s'agissant des activités hautement prioritaires de l'OMM, des activités transsectorielles et des travaux intercommissions qui ont surgi au cours de l'intersession et des propositions d'orientation pour la prochaine intersession.

Elle sera également informée des grandes conclusions de la TECO et souhaitera peut-être prendre des décisions à cet égard.

La Commission sera invitée à s'entretenir des principaux points du rapport du président et à reporter l'examen, au titre de points ultérieurs de l'ordre du jour, de toute question qui doit être étudiée d'une manière plus approfondie ou qui appelle des mesures de sa part.

2.2 Rapport des présidents et des coordonnateurs des groupes d'action sectoriels ouverts

La Commission sera informée des activités et des réalisations de ses trois groupes d'action sectoriels ouverts et des coordonnateurs, y compris les résultats des travaux des diverses équipes spéciales et équipes d'experts, et des responsables thématiques. Elle sera informée des progrès des actuels centres d'expérimentation et centres principaux de la CIMO et de la désignation de nouveaux centres d'expérimentation et centres principaux.

2.3 Décisions et recommandations découlant des travaux de la Commission

La Commission sera invitée à discuter de questions spécifiques découlant des travaux qu'elle a menés depuis sa dernière session et à prendre des décisions concernant ses activités. Elle sera notamment invitée à approuver l'édition 2018 provisoire du Guide des instruments et des méthodes d'observation météorologiques et la mise à jour proposée des attributions des centres régionaux d'instruments, et à recommander des méthodes de gestion relatives à ces centres et au Groupe étalon mondial pour l'infrarouge. De plus, elle sera invitée à approuver un nouveau système de classification relatif à la qualité des mesures en surface initiales et périodiques.

3. CONTEXTE STRATÉGIQUE

3.1 Planification stratégique de l'OMM

La Commission sera informée des progrès enregistrés récemment par le Groupe de travail de la planification stratégique et opérationnelle relevant du Conseil exécutif pour ce qui est de la rédaction du Plan stratégique de l'OMM pour la période 2020-2023 ainsi que des principales implications de ce projet de plan sur les priorités de la Commission à l'avenir.

La Commission sera également informée des faits nouveaux intervenus dans la planification de la réorganisation des commissions techniques de l'OMM après la dix-huitième session du Congrès météorologique mondial (2019). Elle sera invitée à discuter des implications qu'aura ce changement structurel sur ses travaux.

3.2 Liens de la Commission avec d'autres activités de l'OMM

La Commission sera informée de la mise en œuvre des activités prioritaires pertinentes de l'OMM et d'autres programmes de l'Organisation. Elle sera informée en particulier des faits nouveaux concernant le Système mondial intégré d'observation de l'OMM (WIGOS), le Système d'information de l'OMM (SIO), le Cadre mondial pour les services climatiques (CMSC), la réduction des risques de catastrophe et la Veille mondiale de la cryosphère. Elle sera informée aussi des propositions de collaboration en relation avec les autres commissions techniques et les conseils régionaux ou émanant de ces commissions et conseils.

La Commission sera invitée à s'entretenir de sa participation à ces activités et à envisager des mesures et des recommandations concernant son apport et son soutien à ces activités et programmes ainsi que la nécessité de renforcer sa collaboration avec les programmes et Régions de l'OMMM.

3.3 Collaboration avec les organisations internationales compétentes

La Commission fera le point sur la collaboration de l'OMM avec l'Organisation internationale de normalisation (ISO) et la Commission internationale des poids et mesures (CIPM) en ce qui concerne la normalisation des instruments et des méthodes d'observation météorologiques ainsi que les normes et méthodes d'étalonnage. Elle passera aussi en revue les liens qu'elle entretient avec l'Association des fabricants d'équipements hydrométéorologiques (HMEI).

La Commission sera invitée à envisager de participer aux activités menées en collaboration avec ces organisations et à examiner les propositions de mesures et de recommandations nécessaires pour soutenir ces activités, comme l'élaboration de normes communes OMM-ISO et le projet de modèle relatif aux conditions des appels d'offre lancé par l'HMEI et développé en collaboration avec la Banque mondiale et l'OMM.

3.4 Mesures environnementales: perspectives d'avenir

La Commission passera en revue le projet de perspectives d'avenir sur les mesures environnementales, dans le cadre de la proposition de Plan stratégique de l'OMM pour la période 2020-2023 ainsi que d'autres documents directifs de façon que ce projet concorde avec les futures orientations stratégiques de l'Organisation. Elle sera ensuite invitée à adopter ce projet et à en faire un de ces principes directeurs pour établir des priorités parmi ses activités. Elle actualisera en conséquence sa stratégie et sa proposition de structure.

4. FUTURS PROGRAMME ET STRUCTURE DE TRAVAIL DE LA COMMISSION

4.1 Activités prioritaires

En se fondant sur ses autres documents et sur les résultats de ses délibérations, la Commission décidera de ses activités prioritaires.

4.2 Structure de travail

En se fondant sur ses autres documents et sur les résultats de ses délibérations, la Commission examinera et arrêtera une nouvelle structure de travail.

La Commission passera en revue les modalités de désignation des experts et nommera ceux qui feront partie de son groupe de gestion, en s'attachant à définir leur mandat pour l'intersession et en veillant à assurer une représentation équilibrée des deux sexes et des différentes régions du monde.

La Commission décidera de la structure de travail, ce qui consistera notamment à établir des équipes d'experts et des équipes spéciales et à nommer des responsables. Afin d'améliorer son efficacité, elle envisagera de nouveaux modes d'organisation qui soient de nature à améliorer l'équilibre entre les régions et entre les sexes pour chaque domaine d'activité prioritaire. La Commission sera invitée à apporter son soutien aux équipes d'experts interprogrammes établies avec d'autres commissions techniques.

5. EXAMEN DES RÉSOLUTIONS ET DES RECOMMANDATIONS ANTÉRIEURES DE LA COMMISSION AINSI QUE DES RÉSOLUTIONS PERTINENTES DU CONSEIL EXÉCUTIF

La Commission sera informée des décisions antérieures du Congrès et du Conseil exécutif qui présentent un intérêt pour ses travaux.

La Commission fera le point sur le travail accompli pendant l'intersession, eu égard aux résolutions et recommandations adoptées à sa seizième session et lors des sessions antérieures, et se prononcera sur celles qu'elle compte maintenir en vigueur à la lumière des résolutions et des décisions pertinentes du Congrès et du Conseil exécutif. Elle adressera le cas échéant des recommandations à ces derniers.

Les amendements au Règlement technique (y compris à ses annexes) proposés par les équipes d'experts ou par les Membres seront examinés durant la session.

6. ÉLECTION DES MEMBRES DU BUREAU

La Commission devra élire un président et un vice-président qui demeureront en fonction jusqu'à la fin de sa session suivante. Les règles 11, 27, 57 à 65, 80 à 90 et 183 du Règlement général de l'OMM ainsi que la résolution 37 (Cg-XI) donnent des précisions sur les conditions d'éligibilité et les modalités de cette élection.

7. DATES ET LIEU DE LA DIX-HUITIÈME SESSION

La Commission se prononcera sur le lieu et la date de sa dix-huitième session.

8. CLÔTURE DE LA SESSION

La dix-septième session de la Commission des instruments et des méthodes d'observation devrait prendre fin le 16 octobre 2018 à 17 h 30.

_____

Всемирная метеорологическая организация

КОМИССИЯ ПО ПРИБОРАМ И МЕТОДАМ НАБЛЮДЕНИЙ

Семнадцатая сессия
Амстердам, Нидерланды, 12—16 октября 2018 г.

CIMO-17/INF. 1(3)
Представлен:
Генеральным секретарем
22.VI.2018 г.

ПРЕДВАРИТЕЛЬНАЯ АННОТИРОВАННАЯ ПОВЕСТКА ДНЯ

1. ОРГАНИЗАЦИЯ СЕССИИ

1.1 Открытие сессии

Семнадцатая сессия Комиссии по приборам и методам наблюдений (КПМН) будет проводиться в Амстердаме, Нидерланды, с 12 по 16 октября 2018 г. Церемония открытия состоится в 9:30 12 октября 2018 г. Информация об организационных аспектах сессии содержится в документе CIMO-17/INF. 1(1). Церемонию открытия будет проводить правительство Нидерландов, и за ней последуют приветственные обращения президента КПМН и Генерального секретаря ВМО или его представителя.

Пленарные сессии Комиссии, полностью обеспеченные синхронным переводом, начнутся 12 октября 2018 г., и, как ожидается, завершатся к 17:30 16 октября 2018 г.

Сессии будет предшествовать Техническая конференция по приборам и методам наблюдений в области метеорологии и окружающей среды КПМН (ТЕКО-2018 КПМН), которая будет проводиться с 8 по 11 октября 2018 г. в зале 8 амстердамского конгресс-центра «RAI». ТЕКО-2018 КПМН будет проводиться совместно со Всемирной выставкой метеорологических технологий 2018 г. (9—11 октября), вторым Международным форумом пользователей систем спутниковой связи (9—11 октября) и Конференцией метеорологической отрасли ВМО (11—12 октября).

1.2 Рассмотрение доклада о полномочиях

Список представителей, участвующих в работе сессии, будет представлен для доступа в кратчайшие сроки после открытия сессии в соответствии с правилами 21—24 Общего регламента. Этот список будет основан на полномочиях, полученных Генеральным секретарем ВМО, а также на полномочиях, переданных представителю Генерального секретаря ВМО на сессии.

1.3 Принятие повестки дня

В соответствии с правилом 193 Общего регламента предварительная повестка дня будет представлена на утверждение Комиссии в кратчайшие сроки после открытия сессии, при этом в любое время по ходу сессии в нее могут вноситься изменения.

Дополнительные пункты к повестке дня могут направляться Членами/государствами-членами в Секретариат до начала сессии, но предпочтительно не позднее, чем за 30 дней до ее открытия. Такие предложения должны сопровождаться пояснительными записками.

Рабочие документы, представляемые Членами/государствами-членами по пунктам предварительной повестки дня, должны направляться в Секретариат как можно раньше, желательно не позднее чем за 60 дней до открытия сессии, согласно правилу 190.

Участникам будет предложено рассмотреть и принять эту предварительную повестку дня, которая в соответствии с правилом 191 включает пункты, которые обычно включаются в

предварительную повестку дня, а также любые пункты, внесенные Президентом ВМО, Исполнительным советом ВМО, другими техническими комиссиями, ассоциациями, комитетами, Организацией Объединенных Наций, а также Членами/государствами-членами.

1.4 Учреждение комитетов

В соответствии с правилами 23—32 Общего регламента сессия может учреждать, по необходимости, комитет по полномочиям, комитет по назначениям, редакционный комитет, координационный комитет и любые другие комитеты, которые она сочтет необходимыми учредить.

При обсуждении пункта 1.4 Комиссия примет решение о необходимости учреждения комитета по полномочиям.

В соответствии с правилами 25 и 29 для обеспечения надлежащей координации работы сессии Комиссия может учредить комитет по координации.

Техническая работа сессии будет осуществляться на пленарном заседании под председательством президента. Комиссия может пожелать назначить дополнительных экспертов для оказания поддержки президенту в качестве председателей при рассмотрении конкретных технических пунктов повестки дня.

1.5 Прочие организационные вопросы

Комиссия согласует следующее:

a) часы работы заседаний: 9:30—12:30 и 14:30—17:30;

b) предварительную программу работы сессии.

Все документы, требуемые для проведения сессии КПМН-17, будут доступны на веб-сайте КПМН-17 по ссылке: http://meetings.wmo.int/CIMO-17. В целях сокращения углеродного следа сессии распечатываться копии документов не будут. Участникам рекомендуется работать с электронными документами.

2. ДОКЛАД О ДЕЯТЕЛЬНОСТИ КОМИССИИ

2.1 Доклад президента Комиссии

Комиссия будет проинформирована об основных видах деятельности Комиссии со времени ее последней сессии (Санкт-Петербург, Российская Федерация, 2014 г.), мерах, принятых президентом в поддержку высокоприоритетных видов деятельности ВМО, сквозных видов деятельности, а также межкомиссионных мероприятий, возникших в ходе межсессионного периода, а также предложения о будущих направлениях работы на следующий межсессионный период.

Она также будет проинформирована об итогах ТЕКО-2018, и может пожелать принять решения на основании вытекающих из них вопросов.

Комиссии будет предложено обсудить ключевые моменты из доклада президента и отложить любые вопросы, требующие подробного изучения или последующих действий Комиссии по соответствующим пунктам повестки дня.

2.2 Доклады председателей и координаторов ОГПО

Комиссия будет проинформирована о деятельности и достижениях трех открытых групп по программным областям КПМН (ОГПО) и координаторов, включая промежуточные и конечные результаты работы различных экспертных и целевых групп, а также руководителей по темам. Она будет проинформирована о достижениях испытательных полигонов и ведущих центров КПМН, а также о назначении президентом новых испытательных полигонов и ведущих центров КПМН.

2.3 Решения и рекомендации, вытекающие из работы Комиссии

Комиссии будет предложено обсудить конкретные вопросы, вытекающие из работы Комиссии с момента проведения КПМН-16, а также принять решения в отношении конечных результатов конкретных видов деятельности. В частности, Комиссии будет предложено утвердить предварительное издание руководства по метеорологическим приборам и методам наблюдений 2018 года, предлагаемый обновленный Круг ведения для региональных центров по приборам (РЦП), а также рекомендации по процедурам управления для РЦП и для Всемирной группы по инфракрасным стандартам. Ей также будет предложено утвердить новую схему классификации по качеству первоначальных и текущих измерений поверхности.

3. СТРАТЕГИЧЕСКИЙ КОНТЕКСТ

3.1 Стратегическое планирование ВМО

Комиссия будет проинформирована о недавнем прогрессе Рабочей группы Исполнительного совета по стратегическому и оперативному планированию в части разработки Стратегического плана ВМО на период 2020—2023 гг. и основных последствиях проекта плана для будущих приоритетов работы Комиссии.

Комиссия будет также проинформирована о последних изменениях в планировании применительно к реорганизации структуры технических комиссий ВМО после проведения восемнадцатой сессии Конгресса ВМО в 2019 г. Комиссии будет предложено обсудить последствия этих структурных изменений для КПМН.

3.2 Отношения КПМН с другими видами деятельности ВМО

Комиссия будет проинформирована о разработке соответствующих приоритетных видов деятельности ВМО и других программ ВМО. В частности, Комиссия будет проинформирована о развитии в области Интегрированной глобальной системы наблюдений ВМО (ИГСНВ), Информационной системы ВМО (ИСВ), Глобальной рамочной основы для климатического обслуживания (ГРОКО), снижения риска бедствий (СРБ) и Глобальной службы криосферы (ГСК). Комиссия будет также проинформирована о предложениях о сотрудничестве, связанных с работой других технических комиссий и региональных ассоциаций или вытекающими из этой работы.

Комиссии будет предложено обсудить ее участие в этих видах деятельности и рассмотреть предлагаемые меры и рекомендации в отношении ее вкладов и оказания поддержки в осуществлении этих видов деятельности и программ, а также необходимость укрепления взаимодействия с другими программами и регионами ВМО.

3.3 Сотрудничество с соответствующими международными организациями

Комиссии будет предложено рассмотреть вопрос о сотрудничестве между Международной организацией по стандартизации (ИСО), Международным комитетом мер и весов (МКМВ) и

ВМО в области стандартизации метеорологических приборов и методов наблюдений, а также в сфере стандартов и методов калибровки. Комиссии также будет предложено рассмотреть вопрос о ее сотрудничестве с Ассоциацией производителей гидрометеорологического оборудования (ПГМО).

Комиссии будет предложено рассмотреть вопрос о ее участии в конкретных видах деятельности, осуществляемых в сотрудничестве с этими организациями, а также о предлагаемых мерах и рекомендациях, необходимых для поддержки этих видов деятельности, таких как выработка общих стандартов ВМО-ИСО, а также проекте по общим условиям проведения торгов, инициированном ПГМО, и далее развиваемым во взаимодействии со Всемирным банком и ВМО.

3.4 Концептуальное видение будущего производства измерений в области окружающей среды

Комиссия проведет обзор проекта концептуального видения для будущего измерений в области окружающей среды в контексте Стратегического плана ВМО на период с 2020 по 2023 год и других относящихся к политике документов ВМО, с тем чтобы обеспечить соответствие концептуального видения будущим стратегиям ВМО. Затем ей будет предложено принять концептуальное видение и использовать его в качестве руководящего принципа для определения приоритетности видов своей деятельности. На основе этого обзора и обсуждений Комиссия обновит свой стратегический курс и предлагаемую структуру.

4. БУДУЩАЯ РАБОТА И РАБОЧАЯ СТРУКТУРА КОМИССИИ

4.1 Приоритетные виды деятельности

На основании предыдущих документов и обсуждений Комиссии будет предложено выявить ключевые области для будущей работы Комиссии.

4.2 Рабочая структура

На основании предыдущих документов и обсуждений Комиссия рассмотрит и примет решение о новой рабочей структуре КПМН.

Комиссия рассмотрит процесс, используемый для назначения экспертов. Она назначит соответствующих экспертов для включения в состав группы управления с должным учетом регионального и гендерного баланса, а также примет решение об их круге ведения на межсессионный период.

Комиссия обсудит и утвердит рабочую структуру, которая будет включать учреждение экспертных групп, целевых групп, назначение руководителей по темам, а также назначение их соответствующих руководителей. В целях повышения эффективности работы Комиссии на сессии будут рассмотрены новые рабочие механизмы, которые обеспечат региональный и гендерный баланс в каждой приоритетной области. Комиссии также будет предложено одобрить межпрограммные экспертные группы с другими техническими комиссиями.

5. РАССМОТРЕНИЕ РАНЕЕ ПРИНЯТЫХ РЕЗОЛЮЦИЙ И РЕКОМЕНДАЦИЙ КОМИССИИ И СООТВЕТСТВУЮЩИХ РЕЗОЛЮЦИЙ ИСПОЛНИТЕЛЬНОГО СОВЕТА

Комиссия будет проинформирована о предыдущих решениях Конгресса и Исполнительного совета, касающихся работы Комиссии.

Комиссия проведет обзор своих резолюций и рекомендаций с момента проведения сессии КПМН-16 и ранее проведенных сессий в свете прогресса, достигнутого в межсессионный период, и решит, какие из них должны оставаться в силе, принимая во внимание соответствующие резолюции и решения Всемирного метеорологического конгресса и Исполнительного совета. Комиссия может в соответствующих случаях выносить рекомендации Исполнительному совету и Конгрессу.

Комиссией будут рассмотрены предложения о конкретных поправках к Техническому регламенту (включая приложения к нему), представленные в ходе проведения сессии экспертными группами или Членами.

6. ВЫБОРЫ ДОЛЖНОСТНЫХ ЛИЦ

Комиссия избирает президента и вице-президента со сроком полномочий до завершения следующей сессии Комиссии. Подробная информация, касающаяся права на избрание и процедур выборов, изложена в правилах 11, 27, 57—65, 80—90 и 183 Общего регламента ВМО, а также в резолюции 37 (Кг-XI).

7. ДАТА И МЕСТО ПРОВЕДЕНИЯ ВОСЕМНАДЦАТОЙ СЕССИИ

Комиссия решит, где и когда провести свою восемнадцатую сессию.

8. ЗАКРЫТИЕ СЕССИИ

Семнадцатая сессия Комиссии по приборам и методам наблюдения завершит свою работу 16 октября 2018 г. в 17:30.

_____

Organización Meteorológica Mundial

COMISIÓN DE INSTRUMENTOS Y MÉTODOS DE OBSERVACIÓN

Decimoséptima reunión
Ámsterdam, Países Bajos, 12 a 16 de octubre de 2018

CIMO-17/INF. 1(3)
Presentado por:
Secretario General
22.VI.2018

ORDEN DEL DÍA PROVISIONAL ANOTADO

1. ORGANIZACIÓN DE LA REUNIÓN

1.1 Apertura de la reunión

La decimoséptima reunión de la Comisión de Instrumentos y Métodos de Observación (CIMO) se celebrará en Ámsterdam (Países Bajos) del 12 al 16 de octubre de 2018. La ceremonia de apertura tendrá lugar el 12 de octubre a las 9.30 horas. La información sobre las disposiciones prácticas para la reunión figura en el documento CIMO-17/INF. 1(1). Un representante del Gobierno de los Países Bajos inaugurará la reunión. Seguidamente, el presidente de la CIMO y el Secretario General de la OMM o su representante pronunciarán los discursos de bienvenida.

Las sesiones plenarias de la Comisión, en las que habrá servicios de interpretación a todos los idiomas de la reunión, empezarán el 12 de octubre y se prevé que terminen el 16 de octubre hacia las 17.30 horas.

La reunión estará precedida por la Conferencia Técnica sobre Instrumentos y Métodos de Observación Meteorológicos y Medioambientales de 2016 (TECO 2018) de la CIMO, que tendrá lugar del 8 al 11 de octubre de 2018 en el Hall 8 del Centro de Convenciones RAI Amsterdam. La TECO 2018 de la CIMO se celebrará conjuntamente con la Exposición Mundial de Tecnología Meteorológica (9 a 11 de octubre de 2018), la segunda reunión del Foro internacional de usuarios de sistemas de telecomunicación de datos satelitales (9 a 11 de octubre) y la Conferencia sobre las entidades del ámbito de la meteorología de la OMM (11-12 de octubre).

1.2 Examen del informe sobre credenciales

De conformidad con las Reglas 21 a 24 del Reglamento General de la OMM, se elaborará una lista de los representantes que asistirán a la reunión tan pronto como sea posible después de la apertura de la reunión. La lista estará basada en las credenciales que reciba el Secretario General de la OMM y en las entregadas a su representante en la reunión.

1.3 Adopción del orden del día

De conformidad con lo dispuesto en la Regla 193 del Reglamento General, el orden del día provisional se someterá a la aprobación de la Comisión tan pronto como sea posible después de la ceremonia de apertura y se podrá modificar en cualquier momento durante el curso de la reunión.

Cualquier Miembro podrá proponer a la Secretaría puntos adicionales al orden del día antes del inicio de la reunión, aunque, de preferencia, por lo menos 30 días antes de su apertura. Estas propuestas deberían ir acompañadas de una memoria explicativa.

Asimismo, según la Regla 190, los documentos de trabajo correspondientes a los puntos del orden del día provisional presentados por los Miembros deberían ponerse a disposición de la Secretaría lo antes posible, pero preferentemente 60 días antes de la apertura de la reunión.

Se invitará a los participantes a que examinen y adopten este orden del día provisional, el cual, de conformidad con la Regla 191, comprende, además de los puntos habituales, cualquier punto que presenten el Presidente de la OMM, el Consejo Ejecutivo de la Organización, otras comisiones técnicas, asociaciones regionales, comités, las Naciones Unidas y los Miembros de la OMM.

1.4 Establecimiento de comités

De conformidad con las Reglas 23 a 32 del Reglamento General, tal vez la Comisión desee establecer un Comité de Credenciales, un Comité de Candidaturas, un Comité de Redacción, un Comité de Coordinación y cuantos comités juzgue necesarios.

Al abordar el punto 1.4, la Comisión decidirá si se debe crear o no un Comité de Credenciales.

A fin de lograr una adecuada coordinación de las actividades de la reunión, la Comisión puede crear un Comité de Coordinación conforme a las Reglas 25 y 29.

La labor técnica de la reunión se llevará a cabo en sesiones plenarias, bajo la dirección del presidente. Tal vez la Comisión desee designar a otros expertos para que asistan al presidente con respecto a determinados puntos técnicos del orden del día.

1.5 Otras cuestiones de organización

La Comisión se pondrá de acuerdo sobre lo siguiente:

a) El horario de trabajo de las sesiones: 9.30 a 12.30 y 14.30 a 17.30 horas;

b) El programa de trabajo provisional de la reunión.

Todos los documentos requeridos para la decimoséptima reunión de la CIMO se pondrán a disposición en la siguiente dirección web: http://meetings.wmo.int/CIMO-17. A fin de reducir la huella de carbono de la reunión, no se harán copias impresas de los documentos. Así pues, se alienta a los participantes a que trabajen con documentos electrónicos.

2. INFORME SOBRE LAS ACTIVIDADES DE LA COMISIÓN

2.1 Informe del presidente de la Comisión

Se informará a la Comisión sobre las actividades principales llevadas a cabo desde su última reunión (San Petersburgo, Federación de Rusia, 2014), las medidas adoptadas por el presidente en apoyo de las actividades altamente prioritarias de la OMM, las actividades transectoriales y las iniciativas entre comisiones surgidas durante el período entre reuniones, y las propuestas respecto a la línea de actuación para el próximo período entre reuniones.

Asimismo, se la informará sobre los resultados principales de la TECO-2018 y tal vez desee tomar decisiones a ese respecto.

Se invitará a la Comisión a que debata los puntos principales del informe del presidente y remita el examen de todo punto que requiera un estudio detallado o medidas ulteriores de su parte al de los puntos correspondientes del orden del día de la reunión.

2.2 Informes de los presidentes y los coordinadores de los grupos abiertos de área de programa

Se informará a la Comisión sobre las actividades y los logros de sus tres grupos abiertos de área de programa (GAAP) y de los coordinadores, incluidos los productos y resultados de los diversos equipos de expertos y equipos especiales, y de los líderes temáticos. Se la informará también de los avances de los bancos de pruebas y los centros principales de la CIMO, y de la designación por el presidente de nuevos bancos de pruebas y centros principales.

2.3 Decisiones y recomendaciones resultantes del trabajo de la Comisión

Se invitará a la Comisión a debatir cuestiones específicas relacionadas con la labor que ha realizado desde su decimosexta reunión y a tomar decisiones con respecto a sus actividades. Entre otras cosas, se la invitará a que apruebe la edición provisional de 2018 de la *Guía de Instrumentos y Métodos de Observación Meteorológicos*, la propuesta de mandato actualizado de los Centros Regionales de Instrumentos (CRI) y los procedimientos de gobernanza recomendados para los CRI y para el Grupo Mundial de Patrones de Radiación Infrarroja. Se la invitará también a aprobar un nuevo sistema de clasificación sobre la calidad de las mediciones en superficie iniciales y continuas.

3. CONTEXTO ESTRATÉGICO

3.1 Planificación estratégica de la Organización Meteorológica Mundial

Se informará a la Comisión de los progresos recientes del Grupo de trabajo del Consejo Ejecutivo sobre planificación estratégica y operacional en la redacción del Plan Estratégico de la OMM para 2020-2023, y de las principales consecuencias del proyecto de este plan para las futuras prioridades de trabajo de la Comisión.

Asimismo, se informará a la Comisión de las últimas novedades en la planificación de la reorganización de la estructura de las comisiones técnicas de la OMM después del Decimoctavo Congreso Meteorológico Mundial de la OMM en 2019. Se la invitará a analizar las repercusiones de este cambio estructural para su labor.

3.2 Relación de la CIMO con otras actividades de la Organización Meteorológica Mundial

Se informará a la Comisión sobre la puesta en marcha de las actividades prioritarias pertinentes de la OMM y de otros programas de la Organización. En particular, se la informará acerca de las novedades en cuanto al Sistema Mundial Integrado de Sistemas de Observación de la OMM (WIGOS), el Sistema de Información de la OMM (SIO) de la OMM, el Marco Mundial para los Servicios Climáticos (MMSC), la reducción de los riesgos de desastre y la Vigilancia de la Criosfera Global (VCG). Asimismo, se la informará sobre las propuestas de colaboración relacionadas con las demás comisiones técnicas y asociaciones regionales, o dimanantes de las mismas.

Se invitará a la Comisión a analizar su participación en esas actividades y a considerar las medidas y recomendaciones propuestas con respecto a su contribución y apoyo a las actividades y programas pertinentes, así como la necesidad de fortalecer la colaboración con otros programas y Regiones de la OMM.

3.3 Colaboración con las organizaciones internacionales pertinentes

Se invitará a la Comisión a que aborde el tema de la colaboración entre la Organización Internacional de Normalización (ISO), el Comité Internacional de Pesos y Medidas (CIPM) y la OMM en materia de normalización de instrumentos y métodos de observación meteorológicos, así como de normas y métodos de calibración. Se invitará también a la Comisión a que examine su colaboración con la Asociación de la Industria de Equipos Hidrometeorológicos (HMEI).

Se invitará a la Comisión a que analice su participación en actividades específicas llevadas a cabo en colaboración con estas organizaciones y examine las propuestas de medidas y recomendaciones necesarias para apoyar estas actividades, tales como la elaboración de normas comunes de la OMM y la ISO y el proyecto de especificaciones de licitación genéricas puesto en marcha por la HMEI y desarrollado ulteriormente en colaboración con el Banco Mundial y la OMM.

3.4 Visión de futuro con respecto a las mediciones ambientales

La Comisión examinará el proyecto de visión de futuro con respecto a las mediciones ambientales en el contexto del Plan Estratégico de la OMM propuesto para 2020-2023 y de otros documentos normativos de la OMM a fin de velar por que la Visión se ajuste a las futuras estrategias de la Organización. Luego, se la invitará a que adopte la Visión y la use como principio rector con el fin de establecer prioridades para sus actividades. Sobre la base de tal examen, la Comisión actualizará su orientación estratégica y la estructura propuesta.

4. ESTRUCTURA Y PROGRAMA DE TRABAJO FUTUROS DE LA COMISIÓN

4.1 Actividades prioritarias

Sobre la base de sus documentos y discusiones anteriores, la Comisión habrá de determinar las principales esferas de su labor en el futuro.

4.2 Estructura de trabajo

Sobre la base de sus documentos y discusiones anteriores, la Comisión examinará y adoptará una nueva estructura de trabajo.

La Comisión examinará las modalidades de designación de expertos y nombrará a los integrantes de su Grupo de gestión, atendiendo debidamente al equilibrio regional y de género, y determinará su mandato para el período entre reuniones.

La Comisión debatirá y aprobará la estructura de trabajo, que incluirá la creación de equipos de expertos, equipos especiales y líderes temáticos, y designará a sus líderes respectivos. Con el fin de que su labor sea más eficaz, en la reunión se examinarán nuevos arreglos de trabajo destinados a mejorar el equilibrio regional y de género en cada esfera prioritaria. Asimismo, se la invitará a que dé su respaldo a los equipos de expertos interprogramas establecidos con otras comisiones técnicas.

5. EXAMEN DE LAS RESOLUCIONES Y RECOMENDACIONES ANTERIORES DE LA COMISIÓN Y DE LAS RESOLUCIONES PERTINENTES DEL CONSEJO EJECUTIVO

Se informará a la Comisión sobre las decisiones anteriores adoptadas por el Congreso y el Consejo Ejecutivo pertinentes para su labor.

La Comisión examinará las resoluciones y recomendaciones de su decimosexta reunión y de reuniones anteriores, a la luz de los progresos realizados durante el período entre reuniones, y decidirá cuáles deben mantenerse en vigor teniendo en cuenta las resoluciones y decisiones pertinentes del Congreso Meteorológico Mundial y el Consejo Ejecutivo. La Comisión podrá formular recomendaciones a cualquiera de estos dos órganos, según proceda.

La Comisión examinará las propuestas concretas de enmiendas al Reglamento Técnico (incluidos sus anexos) que presenten los equipos de expertos o los Miembros.

6. ELECCIÓN DE AUTORIDADES

La Comisión deberá elegir a un presidente y un vicepresidente para que desempeñen sus cargos respectivos hasta que finalice la próxima reunión de la Comisión. Los detalles relativos a las condiciones de elegibilidad y a los procedimientos de elección figuran en las Reglas 11, 27, 57-65, 80-90 y 183 del Reglamento General de la OMM y en la Resolución 37 (Cg-XI).

7. FECHA Y LUGAR DE LA DECIMOCTAVA REUNIÓN

La Comisión decidirá cuándo y dónde celebrará su decimoctava reunión.

8. CLAUSURA DE LA REUNIÓN

Está previsto que la decimoséptima reunión de la Comisión de Instrumentos y Métodos de Observación se clausure el 16 de octubre de 2018 a las 17.30 horas.

_____

World Meteorological Organization

COMMISSION FOR INSTRUMENTS AND METHODS OF OBSERVATION

Seventeenth Session
Amsterdam, The Netherlands, 12 to 16 October 2018

CIMO-17/INF. 2.1(1)
Submitted by:
Secretary-General
11.IX.2018

REPORT OF THE PRESIDENT OF THE COMMISSION

Introduction

1. The president thanked KNMI for its kind invitation to host the seventeenth session of the Commission for Instruments and Methods of Observation (CIMO-17) in Amsterdam from 12 to 16 October 2018, and the WMO Technical Conference on Meteorological and Environmental Instruments and Methods of Observation (TECO-2018), from 8 to 11 October 2018. TECO-2018 was held conjointly with the 2018 SatCom Forum, the WMO Weather Enterprise Conference and UKi Media and Events' Meteorological Technology World Expo 2018. This exemplifies the success that can be achieved by partnerships between WMO and the private sector – the organizers of the exhibition in particular, and the exhibitors. This series of events also provides a unique capacity development opportunity, enabling not only exchange of experiences between National Meteorological and Hydrological Services (NMHSs), but also with the private sector partners.

CIMO Vision and Mission

2. The members of the CIMO Management Group (MG) have embraced the recent review of the WMO governance structure, in particular the plan to better structure the organization's technical commissions for greater efficiency and effectiveness. Rapid evolution of new technologies and data sources are taking place, on a scale not seen previously and many of which cannot be controlled by WMO and its Members. There is also a growing need for WMO to embrace public private partnerships to best deliver the services demanded by Members. Led by the vice-president, Dr Forgan, CIMO MG developed a Mission and Vision Statement for the Future of Environmental Measurements within WIGOS centered on delivery of fit-for-purpose measurements, which will ensure that, irrespective of the future structure of the technical commissions, the essence of CIMO's work, can continue. Developing guidance on fit-for-purpose measurements represents a real change of focus, recognizing that for some applications, cheaper sensors, simplified procedures, or alternative data could be sufficient. The vision will not only guide the identification of priority activities for CIMO, but will also support the change of WMO governance structure. CIMO has also taken a lead role in working with the other technical commissions and regional associations to assist in developing a new structural model for WMO that ensures all needs for dealing with measurements are well catered for in the new structure.

CIMO Progress 2014-2018

3. The work done during the intersessional period by the Management Group, the expert teams, task teams and theme leaders, was particularly valuable to CIMO as were the contributions made by those Members that hosted intercomparisons, expert meetings, and other CIMO events during the intersessional period. Without such Member contributions, CIMO could not achieve the outcomes that it does. The progress made by the Commission since its sixteenth session, in supporting the seven priorities of the Organization, the WMO Integrated Global Observing System (WIGOS), the Global Framework for Climate Services (GFCS), Disaster Risk Reduction (DRR), Aviation Meteorological Services, Polar and High Mountain Regions Monitoring, Capacity Development and WMO Governance, was directly attributable to the efforts of the CIMO experts.

CIMO TECO 2016 and TECO 2018

4. The 2016 CIMO Technical Conference (TECO-2016) was organized together with the Meteorological Technology World Expo 2016, the second International Workshop on Metrology for Meteorology and Climate (MMC-2016), and with the first International Forum of Users of Satellite Data Telecommunication Systems (SatCom-2016), in Madrid, Spain, at the kind invitation of the Permanent Representative of Spain with WMO, Mr Miguel Angel Lopez Gonzalez. Altogether, approximately 400 people attended TECO-2016 over the four days duration of the conference. After the conference, a survey of the conference participants was organized by the WMO Secretariat. The results of the survey were very positive and helped in understanding what worked well and what could be improved. In view of CIMO's continuous search for improvement, the president recommended that representatives of CIMO Members who attended TECO-2018 complete the 2018 survey that has been distributed to them.

AWS Conference

5. CIMO took the lead in organizing, in collaboration with the Commission for Basic Systems (CBS), the 2017 International Conference on Automatic Weather Stations (ICAWS-2017). The conference was held in Offenbach am Main, Germany, at the kind invitation of Deutscher Wetterdienst (DWD), from 24 to 26 October 2017. The theme of ICAWS-2017 was "Automatic weather stations for environmental intelligence – the AWS in the 21st century". The conference was particularly successful, attracting about 100 participants. In addition to 35 oral and 22 poster presentations, three discussion sessions were held on the training and competency requirements for automation of measurements, working with non-NMHS (partner) data and the opportunities and threats posed by low cost AWS.

CIMO and WIGOS

6. Significant progress has been achieved since Cg-16 in implementing the pre-operational phase of WMO Integrated Global Observing System (WIGOS) and in development of the WIGOS Vision for 2040. Prof. Calpini co-chaired the Inter-Programme Coordination Group on WIGOS (ICG-WIGOS) and several CIMO experts contributed to WIGOS teams. The recent successful implementation of OSCAR was largely due to the lead role taken by the president in securing significant human and financial resources within Switzerland. Meteoswiss has been working in collaboration with WMO in completing this challenging project that now comprises one of the cornerstones of WIGOS. OSCAR provides the metadata related to measurements and serves as the source for quality monitoring of measurements worldwide.

WMO Guide to Meteorological Instruments and Methods of Observation

7. The CIMO Guide is now available in other WMO languages. The specific contributions of CIMO to WIGOS embodied in the collaboration with other WMO programmes, ISO, BIPM and HMEI, in preparing a new edition of the *WMO Guide to Meteorological Instruments and Methods of Observation* (WMO-No. 8, CIMO Guide), for example, by developing an entire new part of the Guide on the measurement of cryospheric variable, inclusion of a new common WMO/ISO standard and improved guidance developed in collaboration with the EURAMET MeteoMet project on organizing interlaboratory comparisons and on measurement uncertainties associated with different siting classifications. Important progress has been made by the CIMO Editorial Board in producing the Preliminary 2018 Edition of the CIMO Guide, which includes a number of updates and/or fully revised chapters that have been developed and/or reviewed by CIMO Expert Teams. The president called for the active engagement of Members to ensure that updated editions will also be translated.

New Web-Based Edition of the International Cloud Atlas

8. There was an overwhelming public and professional response to the publication of the new web-based edition of the International Cloud Atlas that was released on World Meteorological Day 2017. The Atlas, which was developed in collaboration with and is hosted by the Hong Kong Observatory (HKO), has since been awarded a 2017 ASLI Choice Science Award by the Atmospheric Science Librarians International (ASLI) for 'the visionary initiative to create an on-line updated version of this renowned work'. The success of the new edition was largely due to the dedication shown over an extended period by all members of the task team responsible for completing this project. A future success will be the completion of the translation of the website into all WMO languages, being made possible through the technical support of HKO and joint financing between Switzerland and WMO, which will make the Atlas accessible to many more experts worldwide.

CIMO and other Technical Commissions and the Regional Associations

9. Also in the context of WIGOS, good cooperation has been taking place between CIMO and both the regional associations (RA) and other WMO technical commissions in recent years. This cooperation with the other technical commissions has been key to the update of the CIMO Guide, as previously noted, for the development of common WMO-ISO standards, and, for example, for the WMO Solid Precipitation Intercomparison Experiment (SPICE). A strong focus was put on assessment of the Regional Instrument Centres (RICs) in support of Regional Associations and on their related activities in the WIGOS RA Implementation Plans. The proposed new structure of CIMO will further address the continuing need for closer cooperation with the regional associations to look for synergies to avoid duplication of work and ensure CIMO's outputs meet user requirements. The formation, at the instigation of CIMO, of two Inter Progamme Expert Teams with CBS, one for operational weather radars being led by CIMO, the other for aircraft-based measurements to be led by CBS is a good example of this. The establishment of the IPET-OWR enabled to bring under the same umbrella the weather radar experts from different teams, fostering synergies and better use of resources and expertise. It represents now a strong and well-recognized community of experts that is playing a significant role in coordination and expansion of world-wide weather radar data exchange that are expected to have strong impact on services provided to users.

Observations Competencies

10. The president commended the members of the CIMO Task Team on Competencies for the efficient and effective manner in which they developed competencies for specialists involved in instruments and observations: the competencies are for personnel performing meteorological observations, personnel installing and maintaining instrumentation, personnel performing instrument calibrations and personnel managing observing programmes and networks. The high level competencies have been included in *Volume I, Part V of the WMO Technical Regulations* (WMO-No. 49), with the detailed competencies to be included in the aforementioned 2018 edition of the CIMO Guide.

CIMO and HMEI

11. Strong collaboration continues with instrument manufacturers through the Association for Hydro-Meteorological Equipment Industry (HMEI). The president thanked the many HMEI experts who positively contributed to CIMO ET activities and meetings, training workshops and instrument intercomparisons.

12. The collaboration with HMEI on development of the AWS Tender Specification Documentation template was particularly commended. Its initial development was carried out by HMEI, with support from the World Bank, before a detailed review was conducted by the CIMO Management Group, assisted by a seconded expert supported by the Australian Bureau

of Meteorology. The tender template comprises a useful tool for Members engaged in procurement processes for AWS and has been available on the website for Member feedback. This feedback will be critical in ascertaining the usefulness of the tool and in deciding how to further improve it.

CIMO and ISO

13. Successful collaboration continues between WMO and the International Standardization Organization (ISO) on the development of common ISO/WMO technical standards, which has resulted in the recent publication of a standard for ground-based remote sensing of wind by heterodyne pulsed Doppler lidar (Part 2, of the ISO lidar series: ISO 28902-2:2017) and in the finalization of a standard on weather radar (Part 1: System performance and specification: ISO 19926-1). CIMO has agreed to contribute to the development of a new standard on ground-based remote sensing of wind – radar wind profiler (ISO 23032) and another on ground-based remote sensing of meteorological parameters - particle backscatter lidar (ISO 28902-4). Collaboration also continues with ISO on the revision of a number of other standards related to meteorological and hydrological instrumentation.

CIMO and BIPM and the Metrology Community

14. Collaboration between CIMO and the metrology community has taken place at a number of different levels. The president has represented CIMO in the EURAMET Research Council and on its Task Group Environment. BIPM experts have been involved in several CIMO Expert Teams and have contributed very positively to their work and outcomes. The National Physical Laboratory, in London (UK), hosted a reduced meeting of the CIMO Task Team on Radiation References, which included BIPM representatives who have had a very positive impact on the work of the team. BIPM experts have requested from WMO, via CIMO, a list of key topics that WMO would like the metrology community to work on, which the community can refer to when developing research proposals and projects, such as in the context of the EMPIR projects. Several activities have been carried out in the context of the EURAMET MeteoMet project, which have resulted in much closer ongoing ties between metrology and meteorology experts in Europe. An inter-laboratory comparison was organized across Europe with participation from all RA VI RICs and many NMHS calibration laboratories, and the procedures developed during that comparison are now being applied to another interlaboratory comparison in RA II and V.

The Solid Precipitation InterComparison Experiment (SPICE)

15. The final report on the WMO Solid Precipitation Intercomparison Experiment (SPICE) project has recently been published as an IOM Report. This highly successful intercomparison could not have occurred without the willing cooperation of all team members and the participating manufacturers. Mrs Rodica Nitu was commended for her capable leadership as SPICE program manager.

Twelfth International Pyrheliometer Comparison (IPC-XII) and the Second International Pyrgeometer Intercomparison (IPgC-2)

16. The Twelfth International Pyrheliometer Comparison (IPC-12) was held at the Physikalisch-Meteorologisches Observatorium Davos/World Radiation Centre (PMOD/WRC) in Davos, Switzerland in 2015 in conjunction with the Second International Pyrgeometer Intercomparison (IPgC-2). Once again, the two intercomparisons clearly demonstrated significant improvement in the uncertainty and the traceability of short- and long-wave radiation measurements. The excellent conduct of the two intercomparisons and prompt publication of the results was attributable to all PMOD/WRC Davos staff, under the capable leadership of Dr Wolfgang Finsterle (IPC-XII), and Dr Julian Groebner (IPgC-2).

CIMO Structure

17. The CIMO Structure and Terms of Reference had been significantly modified at CIMO-XV to reflect the evolving priorities of Members and the expected contribution from CIMO to WIGOS, with only minor adjustments being made by CIMO-16 to fill a few gaps and improve efficiencies. A number of changes to the structure are being proposed to the current session, to further improve efficiencies, and especially to better shape the commission for the coming WMO technical commission restructuring, that is expected to take place at the Eighteenth World Meteorological Congress (Cg-18), in 2019. Much of the work of the CIMO Management Group over the preceding several months has been explicitly directed towards improving the Commission's working mechanisms to leave it well-poised to provide optimal services to WMO Members in the coming new world of big data and public-private engagement.

Closing Remarks

18. In closing, the president expressed his sincere appreciation and acknowledgements to all the CIMO experts who have contributed to the great variety of activities that have been performed in the intersessional period to ensure the ongoing improvement of the observing systems in use by Members and the overall quality of the observations. He informed that he has now completed his second term of office and would be stepping down from the function of president of the commission. He encouraged his successor to continue actively supporting the transition of the commission into the new WMO governance structure.

_____

المنظمة العالمية للأرصاد الجوية
لجنة أدوات وطرق الرصد
الدورة السابعة عشرة
أمستردام، هولندا، 12-16 تشرين الأول/ أكتوبر 2018

CIMO-17/INF. 2.1(1)
وثيقة مقدمة من:
الأمين العام
11.IX.2018

تقرير رئيس اللجنة

مقدمة

1. شكر الرئيس المعهد الملكي الهولندي للأرصاد الجوية (KNMI) لدعوته الكريمة باستضافة الدورة السابعة عشرة للجنة أدوات وطرق الرصد (CIMO-17) في أمستردام في الفترة من 12 إلى 16 تشرين الأول/ أكتوبر 2018، والمؤتمر الفني للمنظمة (WMO) المعني بأدوات وطرق الرصد الخاصة بالأرصاد الجوية والبيئية (TECO-2018) في الفترة من 8 إلى 11 تشرين الأول/ أكتوبر 2018. وقد عُقد المؤتمر الفني (TECO-2018) مع المنتدى الدولي لمستخدمي نظم الاتصالات الخاصة بالبيانات الساتلية - 2018 (منتدى SatCom) والمؤتمر المعني بالطقس التابع للمنظمة (WMO) والمعرض العالمي لتكنولوجيا الأرصاد الجوية لعام 2018 الذي نظمته شركة UKi Media and Events. وهذا مثال على النجاح الذي يمكن إحرازه من خلال الشراكات بين المنظمة (WMO) والقطاع الخاص – منظمي المعرض على وجه الخصوص، والعارضين. وتوفر هذا السلسلة من اللقاءات أيضاً فرصاً فريدة لتطوير القدرات لا تمكِّن فقط من تبادل الخبرات بين المرافق الوطنية للأرصاد الجوية والهيدرولوجيا (NMHSs)، بل أيضاً مع الشركاء من القطاع الخاص.

رؤية لجنة أدوات وطرق الرصد (CIMO) ورسالتها

2. اعتمد فريق الإدارة التابع للجنة (CIMO) الاستعراض الذي أجري مؤخراً لهيكل حوكمة المنظمة (WMO) ولاسيما خطة تحسين هيكلة اللجان الفنية التابعة للمنظمة من أجل زيادة الكفاءة والفعالية. ذلك أن التطور السريع للتكنولوجيات الجديدة ومصادر البيانات على نطاق لم يسبق له مثيل ولا يمكن للمنظمة (WMO) وأعضائها التحكم في الكثير منها. كما أن هناك حاجة متزايدة إلى اعتماد المنظمة (WMO) للشراكات بين القطاعين العام والخاص لتحسين تقديم الخدمات التي يطلبها الأعضاء. وقد وضع فريق الإدارة التابع للجنة (CIMO)، بقيادة الدكتور Forgan، بيان الرؤية والرسالة من أجل مستقبل القياسات البيئية في إطار النظام العالمي المتكامل للرصد (WIGOS) الذي يركِّز على تقديم قياسات تلائم الهدف المنشود وتكفل، بغض النظر عن الهيكل المستقبلي للجان الفنية، إمكانية استمرار جوهر عمل اللجنة (CIMO). ويمثل وضع إرشادات بشأن تقديم قياسات تلائم الهدف المنشود تغييراً حقيقياً في التركيز، مع إدراك أنه بالنسبة لبعض التطبيقات، قد تكون أجهزة الاستشعار عن بعد الأرخص أو الإجراءات المبسَّطة أو البيانات البديلة كافية. ولن توجه الرؤية تعريف أنشطة اللجنة (CIMO) ذات الأولوية فحسب، بل ستدعم أيضاً تغيير هيكل حوكمة المنظمة (WMO). وقد اضطلعت اللجنة (CIMO) أيضاً بدور ريادي في العمل مع اللجان الفنية الأخرى والاتحادات الإقليمية للمساعدة في وضع نموذج هيكلي جديد للمنظمة (WMO) يضمن تلبية جميع الاحتياجات للتعامل مع القياسات في الهيكل الجديد.

التقدم الذي أحرزته اللجنة (CIMO) في الفترة 2014-2018

3. كان العمل الذي أنجزه فريق الإدارة وفرق الخبراء وفرق العمل والمسؤولون عن مواضيع في فترة ما بين الدورتين قيِّماً خاصة للجنة (CIMO) وكذلك المساهمات التي قدمها الأعضاء الذين استضافوا المقارنات واجتماعات الخبراء وغير ذلك من الأحداث التي أجرتها اللجنة (CIMO) خلال فترة ما بين الدورتين. وبدون مساهمات الأعضاء لا تستطيع اللجنة (CIMO) تحقيق النتائج التي تحققها. والتقدم الذي أحرزته اللجنة منذ دورتها السادسة عشرة في دعم أولويات المنظمة (WMO) السبع، وهي النظام العالمي المتكامل للرصد التابع للمنظمة (WIGOS)، والإطار العالمي للخدمات المناخية (GFCS)، والحد من مخاطر الكوارث (DRR)، ومراقبة خدمات الأرصاد الجوية للطيران، والمناطق القطبية والمرتفعات الجبلية، وتطوير القدرات، وحوكمة المنظمة (WMO)، يُعزى مباشرة إلى الجهود التي يبذلها خبراء لجنة أدوات وطرق الرصد (CIMO).

المؤتمر الفني (TECO 2016) والمؤتمر الفني (TECO 2018) التابعان للجنة أدوات وطرق الرصد (CIMO)

4. تم تنظيم المؤتمر الفني للجنة (CIMO) لعام 2016 (TECO-2016) بالاشتراك مع المعرض العالمي لتكنولوجيا الأرصاد الجوية لعام 2016، والحلقة الدولية الثانية المعنية بعلم القياس لأغراض الأرصاد الجوية والمناخ لعام 2016 (MMC-2016)، ومع المنتدى الدولي الأول لمستخدمي نظم اتصالات البيانات الساتلية لعام 2016 (SatCom-2016) في مدريد، إسبانيا، بدعوة كريمة من الممثل الدائم لإسبانيا لدى المنظمة (WMO)، السيد Miguel Angel Lopez Gonzalez. وإجمالاً، فقد حضر حوالي 400 شخص المؤتمر الفني (TCEO-2016) على مدى الأيام الأربعة للمؤتمر. وبعد المؤتمر نظمت أمانة المنظمة (WMO) دراسة استقصائية للمشاركين في المؤتمر. وجاءت نتائج الدراسة الاستقصائية إيجابية جداً وساعدت في فهم الجوانب الإيجابية في العمل والجوانب التي يمكن تحسينها. وبالنظر إلى سعي اللجنة (CIMO) الدؤوب إلى إجراء تحسينات، أوصى الرئيس بأن يقوم ممثلو أعضاء اللجنة (CIMO) الذين حضروا المؤتمر الفني (TCEO-2018) باستيفاء استقصاء 2018 الذي وُزِّع عليهم.

مؤتمر محطات الأرصاد الجوية الأوتوماتية (AWS)

5. اتخذت اللجنة (CIMO) زمام المبادرة في تنظيم المؤتمر الدولي بشأن محطات الأرصاد الجوية الأوتوماتية لعام 2017 (ICAWS-2017)، بالتعاون مع لجنة النظم الأساسية (CBS). وعُقد المؤتمر في Offenbach am Main، ألمانيا، بدعوة كريمة من دائرة الأرصاد الجوية الألمانية (DWD) في الفترة من 24 إلى 26 تشرين الأول/ أكتوبر 2017. وكان موضوع المؤتمر الدولي (ICAWS-2017) "استخدام محطات الأرصاد الجوية الأوتوماتية للتعامل مع البيئة بذكاء – محطات الطقس الأوتوماتية في القرن الحادي والعشرين". وكان المؤتمر ناجحاً بشكل خاص واجتذب حوالي 100 مشارك. وبالإضافة إلى تقديم 35 عرضاً شفوياً و22 ملصقاً، نُظمت ثلاث حلقات نقاش بشأن متطلبات التدريب والكفاءات لأتمتة القياسات، والعمل مع بيانات واردة من من غير المرافق الوطنية للأرصاد الجوية والهيدرولوجيا (NMHS) (الشركاء)، والفرص المتاحة والمخاطر الناجمة عن محطات الأرصاد الجوية الأوتوماتية (AWS) المنخفضة التكلفة.

لجنة أدوات وطرق الرصد (CIMO) والنظام العالمي المتكامل للرصد (WIGOS)

6. أُحرز تقدم كبير منذ المؤتمر العالمي السادس عشر للأرصاد الجوية في تنفيذ مرحلة ما قبل التشغيل للنظام العالمي المتكامل للرصد (WIGOS) ووضع رؤية النظام (WIGOS) لعام 2040. وكان البروفيسور Calpini رئيساً مشاركاً لفريق التنسيق المشترك بين البرامج والمعني بالنظام العالمي المتكامل للرصد (ICG-WIGOS)، كما ساهم عدد من خبراء اللجنة (CIMO) في الفرق التابعة للنظام (WIGOS). ويُعزى تنفيذ أداة تحليل واستعراض قدرات نظم الرصد (OSCAR) بنجاح مؤخراً إلى الدور الريادي الذي قام به الرئيس في تأمين موارد بشرية ومالية كبيرة في نطاق سويسرا. وعملت دائرة الأرصاد الجوية السويسرية Meteoswiss بالتعاون مع المنظمة (WMO) لاستكمال هذ المشروع الصعب والذي أصبح الآن واحداً من أحجار الزاوية للنظام (WIGOS). وتوفر الأداة (OSCAR) البيانات الشرحية المتعلقة بالقياسات وتعمل كمصدر لمراقبة جودة القياسات في جميع أنحاء العالم.

دليل أدوات وطرق رصد الأحوال الجوية للمنظمة (WMO)

7. دليل اللجنة (CIMO) متاح الآن بلغات المنظمة (WMO) المختلفة. وتتجسد المساهمات التي قدمتها للجنة (CIMO) تحديداً للنظام (WIGOS) في التعاون مع برامج المنظمة (WMO) الأخرى والمنظمة الدولية للتوحيد القياسي (ISO) والمكتب الدولي للموازين والمقاييس (BIPM) ورابطة صناعة معدات الأرصاد الجوية الهيدرولوجية (HMEI)، بشأن إعداد طبعة جديدة *لدليل أدوات وطرق رصد الأحوال الجوية* (مطبوع المنظمة رقم 8، دليل اللجنة (CIMO))، على سبيل المثال بوضع جزء جديد كامل للدليل بشأن قياسات متغيرات الغلاف الجليدي وإدراج معيار جديد مشترك بين المنظمة (WMO) والمنظمة (ISO) ووضع إرشادات محسّنة بالتعاون مع مشروع EURAMET MeteoMet بشأن تنظيم مقارنات مختبرية وبشأن عدم يقين القياسات المرتبطة بالتصنيفات المختلفة للمواقع. وقد حققت هيئة التحرير التابعة للجنة (CIMO) تقدماً هاماً في إصدار الطبعة الأولية لعام 2018 لدليل اللجنة (CIMO) والتي تشمل عدداً من عمليات التحديث و/أو المراجعة لفصول كاملة وضعهتا و/أو استعراضتها فرق الخبراء التابعة للجنة (CIMO). ودعا الرئيس إلى مشاركة الأعضاء بنشاط لضمان ترجمة الإصدارات المحدّثة أيضاً.

الطبعة الإلكترونية الجديدة للأطلس الدولي للسحب

8. استقبل الجمهور والمهنيون بشغف هائل الطبعة الإلكترونية الجديدة للأطلس الدولي للسحب الذي أُطلق في اليوم العالمي للأرصاد الجوية لعام 2017. ومنذ ذلك الحين تم منح الأطلس، الذي وُضع بالتعاون مع مرصد هونغ كونغ (HKO) واستضافته، جائزة ASLI Choice Science لعام 2017 من قبل أمناء المكتبات العالمية لعلوم الغلاف الجوي (ASLI) مكافأة على "مبادرة الرؤية الاستشرافية لإعداد نسخة إلكترونية محدّثة من هذا العمل الشهير". ويُعزى نجاح الإصدار الجديد بشكل كبير إلى التفاني الذي أظهره كافة أعضاء فريق العمل المسؤولين في إتمام هذا المشروع على مدار فترة طويلة. ويتمثل النجاح المقبل في استكمال ترجمة الموقع الإلكتروني إلى جميع لغات المنظمة (WMO) إذ أصبح ذلك ممكناً من خلال المساعدة الفنية التي يقدمها مرصد هونغ كونغ (HKO) والتمويل المشترك بين سويسرا والمنظمة (WMO) والتي من شأنها أن تجعل الأطلس متاحاً لعدد كبير من الخبراء في جميع أنحاء العالم.

لجنة أدوات وطرق الرصد (CIMO) واللجان الفنية الأخرى والاتحادات الإقليمية

9. في إطار النظام العالمي المتكامل للرصد (WIGOS) يجري تعاون جيد بين لجنة أدوات وطرق الرصد (CIMO) والاتحادات الإقليمية (RA) واللجان الفنية الأخرى التابعة للمنظمة (WMO) في السنوات الأخيرة. وكان هذا التعاون مع اللجان الفنية الأخرى عنصراً رئيسياً في تحديث دليل لجنة أدوات وطرق الرصد (CIMO)، كما أشير سابقاً، من أجل وضع معايير مشتركة بين المنظمة (WMO) ومنظمة التوحيد القياسي (ISO)، وعلى سبيل المثال، من أجل تجربة المقارنة الخاصة بهطول المواد الصلبة (SPICE) التي تنظمها المنظمة (WMO). وتم التركيز بقوة على تقييم المراكز الإقليمية للأدوات (RICs) دعماً للاتحادات الإقليمية ولأنشطتها ذات الصلة في خطط تنفيذ النظام (WIGOS). وسيواصل الهيكل الجديد المقترح للجنة (CIMO) تلبية الحاجة المستمرة إلى التعاون الوثيق مع الاتحادات الإقليمية للبحث عن أوجه التآزر لتفادي ازدواجية العمل، والتأكد من أن نواتج اللجنة (CIMO) تفي بمتطلبات المستخدمين. مثال جيد لهذا التعاون تشكيل فرقتي خبراء مشتركتين لبن البرامج مع لجنة النظم الأساسية (CBS)، بإيعاز من لجنة أدوات وطرق الرصد (CIMO)، إحداهما لرادارات الطقس التشغيلية بقيادة اللجنة (CIMO) والأخرى للقياسات على متن الطائرات بقيادة اللجنة (CBS). وقد مكَّن إنشاء فرقة العمل المشتركة بين البرامج والمعنية برادارات الطقس التشغيلية (IPET-OWR) من جمع خبراء رادار الطقس من فرق مختلفة تحت مظلة واحدة، وبذلك تعزيز التآزر وتحسين استخدام الموارد والخبرات. وتمثّل هذه الفرقة الآن مجموعة قوية ومعروفة جيداً من الخبراء تؤدي دوراً هاماً في تنسيق وتوسيع تبادل بيانات الرادار في جميع أنحاء العالم ومن المتوقع أن يكون لها تأثير قوي على الخدمات المقدمة للمستخدمين.

الكفاءات اللازمة لعمليات الرصد

10. أثنى الرئيس على أعضاء فرقة العمل التابعة للجنة (CIMO) والمعنية بالكفاءات، لقيامهم بكفاءة وفعالية بإعداد كفاءات الأخصائيين المشاركين في الأدوات والرصدات: تاكفاءات اللازمة للموظفين القائمين بالرصدات الجوية، والقائمين على تركيب الأدوات وصيانتها، والقائمين بمعايرة الأدوات، والقائمين على إدارة برامج وشبكات الرصد. وقد أُدرجت الكفاءات رفيعة المستوى في *المجلد الأول، الجزء الخامس في اللائحة الفنية للمنظمة (WMO)* (مطبوع المنظمة رقم 49)، وستدرج تفاصيل الكفاءات في طبعة عام 2018 لدليل اللجنة (CIMO) المذكورة آنفاً.

لجنة أدوات وطرق الرصد (CIMO) ورابطة صناعة معدات الأرصاد الجوية الهيدرولوجية (HMEI)

11. يتواصل التعاون بقوة مع مصنعي الأدوات من خلال الرابطة (HMEI). وشكر الرئيس خبراء الرابطة (HMEI) الذين ساهموا بإيجابية في أنشطة فرقة خبراء اللجنة (CIMO) وفي الاجتماعات وحلقات العمل التدريبية وعمليات مقارنة الأدوات.

12. وأُشيد بشكل خاص بالتعاون مع الرابطة (HMEI) بشأن وضع القالب النموذجي لوثيقة مواصفات المناقصات لمحطات الأرصاد الجوية الأوتوماتية (AWS). فقد اضطلعت الرابطة (HMEI) بإعداد القالب النموذجي بشكل أولي، بدعم من البنك الدولي، قبل أن يستعرضه فريق الإدارة التابع للجنة (CIMO) تفصيلياً، بمساعدة خبير منتدب،

يدعمه مكتب الأرصاد الجوية الأسترالي. ويشتمل نموذج المناقصة على أدوات مفيدة للأعضاء المشتركين في عمليات الاشتراء الخاصة بالمحطات (AWS)، وهي متاحة على موقع الويب لتلقي تعقيبات الأعضاء. وستكون التعقيبات حاسمة الأهمية في التحقق من فائدة الأدوات وفي تحديد كيفية مواصلة تحسينها.

لجنة أدوات وطرق الرصد (CIMO) والمنظمة الدولية للتوحيد القياسي (ISO)

13. تواصل التعاون الناجح بين المنظمة العالمية للأرصاد الجوية (WMO) والمنظمة الدولية للتوحيد القياسي (ISO) بشأن إعداد معايير فنية مشتركة بين المنظمة (ISO) والمنظمة (WMO) والذي أثمر في الآونة الأخيرة عن نشر معيار الاستشعار الأرضي عن بعد للرياح باستخدام رادار ليدار دوبلر النبضي المتباين الترددات (الجزء 2، من سلسلة الليدار التابعة للمنظمة (ISO): ISO 28902-2:2017)، والانتهاء من وضع معيار بشأن رادارات الطقس (الجزء 1: أداء ومواصفات النظم: ISO 19926-1). وقد وافقت اللجنة (CIMO) على الإسهام في إعداد معيار جديد بشأن الاستشعار الأرضي عن بعد للرياح – رادار مقياس سرعة الرياح (ISO 23032)، ومعيارآخر بشأن الاستشعار الأرضي عن بعد لبارامترات الأرصاد الجوية – ليدار الجسيمات المشتتة المرتدة (ISO 28902-4). ويتواصل التعاون أيضاً مع المنظمة (ISO) بشأن تعديل عدد من المعايير الأخرى ذات الصلة بأدوات الأرصاد الجوية الهيدرولوجية.

لجنة أدوات وطرق الرصد (CIMO) والمكتب الدولي للموازين والمقاييس (BIPM) ومجتمع علم القياس

14. أقيم التعاون بين اللجنة (CIMO) ومجتمع علم القياس على عدد من المستويات المختلفة. وقد مثَّل الرئيس اللجنة (CIMO) في مجلس البحوث التابع للرابطة الأوروبية للمؤسسات الوطنية للأرصاد الجوية (EURAMET) وفي فريق العمل المعني بالبيئة التابع لها. وقد شارك خبراء المكتب الدولي (BIPM) في عدة فرق خبراء تابعة للجنة (CIMO) وساهموا بإيجابية جداً في عملها ونتائجها. واستضاف المختبر الفيزيائي الوطني في لندن (المملكة المتحدة) اجتماعاً محدوداً لفرقة العمل التابعة للجنة (CIMO) والمعنية بالقيم المرجعية لقياس الإشعاع، والتي تضمنت ممثلين من المكتب الدولي (BIPM) وكان لهم تأثير إيجابي فيما يتعلق بعمل الفرقة. وطلبت فرقة الخبراء التابعة للمكتب الدولي (BIPM)، من المنظمة (WMO)، عن طريق اللجنة (CIMO)، قائمة بالمواضيع الرئيسية التي ترغب المنظمة (WMO) أن يعمل عليها مجتمع علم القياس، والتي يمكن للمجتمع الرجوع إليها عند وضع مقترحات ومشاريع البحوث، كما هو الحال في سياق مشاريع *الصيغة التجريبية للفيضانات* (EMPIR). وتم الاضطلاع بالعديد من الأنشطة في سياق مشروع (EURAMET MeteoMet) والذي نتج عنه توثيق الروابط المتواصلة بين خبراء علم القياس وخبراء الأرصاد الجوية في أوروبا. ونُظمت مقارنة بين المختبرات في جميع أنحاء أوروبا بمشاركة كافة مختبرات المراكز الإقليمية للأدوات (RICs) بالاتحاد الإقليمي الساس (RA VI) والعديد من مختبرات المعايرة في المرافق الوطنية للأرصاد الجوية والهيدرولوجيا (NMHS)، ويجري الآن تطبيق الإجراءات التي وُضعت أثناء تلك المقارنة على مقارنات بينية أخرى في الاتحادين الإقليميين الثاني والخامس.

تجربة المقارنة الخاصة بهطول المواد الصلبة (SPICE)

15. نُشر مؤخراً مشروع التقرير النهائي لتجربة المقارنة الخاصة بهطول المواد الصلبة (SPICE) التابع للمنظمة (WMO) كتقرير من سلسلة تقارير أدوات وطرق الرصد (IOM). وهذه المقارنات الناجحة للغاية لم تكن لتحدث بدون الرغبة القوية في التعاون بين جميع أعضاء الفريق والمصنعين المشاركين. وتم الثناء على السيدة Rodica Nitu لقيادتها القديرة كمدير برنامج تجربة المقارنة (SPICE).

المقارنة الدولية الثانية عشرة لمقاييس إشعاع الشمس المباشر (IPC-XII) والمقارنة الدولية الثانية لمقياس الإشعاع الأرضي (IPgC-2)

16. عُقدت المقارنة الدولية الثانية عشرة لمقاييس إشعاع الشمس المباشر (IPC-XII) في المرصد الفيزيائي للأرصاد الجوية في دافوس/ المركز العالمي لقياس الإشعاع (PMOD/WRC) في دافوس، سويسرا عام 2015، بالتزامن مع المقارنة الدولية الثانية لمقياس الإشعاع الأرضي (IPgC-2). ومرة أخرى، أظهرت المقارنتان بوضوح تحسناً كبيراً

في هامش عدم اليقين وتتبع قياسات الإشعاع ذات الموجات القصيرة والطويلة. ويُعزى التنظيم الممتاز للمقارنتين والنشر الفوري للنتائج إلى جميع موظفي مرصد الأحوال الجوية الفيزيائية/ المركز العالمي لقياس الإشعاع (PMOD/WRC) في دافوس، تحت القيادة القديرة للدكتور Wolfgang Finsterle (المقارنة الدولية IPC-XII) والدكتورة Julian Groebner (المقارنة الدولية IPgC-2).

هيكل لجنة أدوات وطرق الرصد (CIMO)

17. عُدل هيكل لجنة أدوات وطرق الرصد (CIMO) واختصاصاتها بدرجة كبيرة في الدورة الخامسة عشرة للجنة (CIMO) للتعبير عن الأولويات المتطورة للأعضاء والمساهمة المتوقعة من اللجنة (CIMO) في النظام (WIGOS)، مع إدخال تعديلات طفيفة فقط في الدورة السادسة عشرة للجنة (CIMO) لسد بعض الفجوات وتحسين الكفاءات. ويُقترح عدد من التغييرات في هيكل اللجنة على الدورة الحالية لزيادة تحسين الكفاءات، وخصوصاً لتحسين تنظيم اللجنة للعملية القادمة لإعادة هيكلة اللجنة الفنية التابعة للمنظمة (WMO)، والتي من المتوقع أن تحدث في المؤتمر العالمي الثامن عشر للأرصاد الجوية (Cg-18) في عام 2019. وقد تم توجيه جزء كبير من عمل فريق الإدارة التابع للجنة (CIMO) خلال الأشهر القليلة الماضية صراحة نحو تحسين آليات عمل اللجنة لجعلها على أتم الاستعداد لتوفير الخدمات المثلى لأعضاء المنظمة (WMO) في العالم الجديد القادم للبيانات الكبيرة والتعاون بين القطاعين العام والخاص.

ملاحظات ختامية

18. وفي الختام، أعرب الرئيس عن خالص تقديره وشكره لجميع خبراء اللجنة (CIMO) الذين ساهموا في الأنشطة المتنوعة الكبيرة التي نُفذت في فترة ما بين الدورتين لضمان التحسين المستمر لأنظمة الرصد التي يستخدمها الأعضاء والجودة الشاملة للرصدات. وأبلغ اللجنة بأنه أتم الآن فترة رئاسته الثانية وأنه سيتخلى عن منصب رئيس اللجنة. وشجَّع الرئيس الذي سيخلفه على مواصلة الدعم النشط لانتقال اللجنة إلى هيكل الحوكمة الجديد للمنظمة (WMO).

_____

世界气象组织

仪器和观测方法委员会

第十七次届会

2018 年 10 月 12 至 16 日，荷兰阿姆斯特丹

CIMO-17/INF. 2.1(1)

提交者：

秘书长

2018.9.11

委员会主席的报告

引言

1. 主席感谢 KNMI 主动承办仪器和观测方法委员会第十七次届会（CIMO-17）（2018 年 10 月 12 日至 16 日，阿姆斯特丹）以及 WMO 气象和环境仪器与观测方法技术大会 （TECO-2018）（2018 年 10 月 8 日至 11 日）。TECO-2018 与 2018 年 SatCom 论坛、WMO 天气企业会议以及 2018 年 UKi 媒体与事件气象技术世界博览会共同举办。这体现了 WMO 与私营部门（特别是展览的组织者）和参展商之间的合作伙伴关系所取得的成功。这一系列活动还提供了独特的能力发展机会，不仅能够促进国家气象和水文部门（NMHS）之间交流经验，还能与私营部门合作伙伴交流经验。

CIMO 愿景和使命

2. CIMO 管理组（MG）的成员对近期审查 WMO 治理结构表示欢迎，特别是更好地架构该组织的各技术委员会以提高效率和效力的计划。新技术和数据源正在快速发展，其规模前所未见，且其中许多技术和数据来源无法由 WMO 及其会员掌控。WMO 更加需要建立公私合作伙伴关系，以最好地提供会员所需的服务。在副主席 Forgan 博士的带领下，CIMO MG 编写了 WIGOS 内环境测量未来的使命和愿景声明，其重点是提供契合目标的测量，无论未来的技术结构如何，这都将确保 CIMO 工作的精髓得以继续下去。认识到对于一些应用领域来说，更便宜的传感器、简化的程序或替代的数据就足够了，编写有关契合目标的测量的指导材料标志着重点发生了真正变化。该愿景不仅将指导 CIMO 确定优先活动，还将支持 WMO 治理结构的变革。CIMO 还在与其他技术委员会和区域协会合作方面发挥了主导作用，以协助开发新的 WMO 结构模式，从而确保在新结构中满足涉及测量的所有需求。

2014-2018 年期间 CIMO 取得的进展

3. 管理组、专家组、任务组和主题牵头人在休会期间所做的工作对 CIMO 特别有价值，而在休会期间承办比对、专家会议和其他 CIMO 活动的会员所做的贡献也是如此。如果没有会员的贡献，CIMO 无法实现其所取得的成果。委员会自第十六次届会以来在支持本组织七个优先重点，即：WMO 全球综合观测系统（WIGOS）、全球气候服务框架（GFCS）、减轻灾害风险（DRR）、航空气象服务、极地和高山地区监测、能力发展和 WMO 治理等方面取得的进展，都是 CIMO 专家努力的成果。

CIMO TECO 2016 和 TECO 2018

4. 应 WMO 西班牙常任代表 Miguel Angel Lopez Gonzalez 先生的邀请，2016 年 CIMO 技术大会（TECO-2016）与 2016 年气象技术世界博览会、第二届国际气象和气候计量研讨会（MMC-2016）以及第一届国际卫星数据通信系统用户论坛（SatCom-2016）一起在西班牙马德里举办。在为期四天的会议期间，共有约 400 人参加了 TECO-2016。会议结束后，WMO 秘书处组织了对与会者的问卷调查。调查结果非常积极，并有助于了解哪些方面运作良好以及哪些方面可以改进。鉴于 CIMO 不断寻求改进，主席建议参加 TECO-2018 的 CIMO 会员代表完成 2018 年分发给他们的问卷调查。

AWS 会议

5. CIMO 与基本系统委员会（CBS）合作，牵头组织了 2017 年国际自动气象站大会（ICAWS-2017）。应德国气象局（DWD）的邀请，该会议于 2017 年 10 月 24 日至 26 日在德国奥芬巴赫举行。

ICAWS-2017 的主题是“环境智能的自动气象站 - 21 世纪的 AWS”。此次会议非常成功，吸引了约 100 名与会者。除了 35 份口头报告和 22 个海报展示之外，还举行了三次讨论会，分别是关于测量自动化的培训和能力要求、与非 NMHS（合作伙伴）的数据合作以及低成本 AWS 带来的机遇和威胁。

CIMO 与 WIGOS

6. 自 Cg-16 以来，在实施 WMO 全球综合观测系统（WIGOS）预运行阶段以及制定 2040 年 WIGOS 愿景方面取得了重大进展。Calpini 教授担任计划间 WIGOS 协调组（ICG-WIGOS）的联合组长，而一些 CIMO 专家也为 WIGOS 团队做出了贡献。最近 OSCAR 的成功实施主要是由于主席在确保获得瑞士境内重要的人力和财力资源方面发挥了主导作用。瑞士气象局一直与 WMO 合作完成这一具有挑战性的项目，而该项目现在是 WIGOS 的基石之一。OSCAR 可提供与测量相关的元数据，并且是全球测量质量监测的来源。

《WMO 气象仪器和观测方法指南》

7. 《CIMO 指南》现在已提供其他 WMO 语言版本。CIMO 对 WIGOS 的具体贡献体现在与其他 WMO 计划、ISO、BIPM 和 HMEI 合作编写了新版《WMO 气象仪器和观测方法指南》（WMO-No.8，CIMO 指南），例如，通过编写关于冰冻圈变量测量指南的全新部分，纳入新的 WMO/ISO 通用标准，改进与 EURAMET MeteoMet 项目合作编写的组织实验室间比对和与不同选址分类相关的测量不确定性方面的指南。CIMO 编辑委员会在编制《CIMO 指南》2018 年初版方面已取得重要进展，其中包括经 CIMO 专家组编制和/或审查的若干更新和/或全面修订的章节。主席呼吁会员积极参与以确保可以翻译更新版本。

网络版本的新《国际云图集》

8. 网络版本的新《国际云图集》在 2017 年世界气象日上发布，公众和专业人士对其反应热烈。《云图集》是与香港天文台（HKO）合作编写并由其主办，2017 年该《云图集》获得了国际大气科学图书馆协会授予的 ASLI 精选科学奖，以表彰其“非常有远见的举措，创立了该著名作品的在线更新版本”。新版本的成功很大程度上归功于负责完成该项目的任务组的所有成员在很长一段时间内所表现出的奉献精神。未来的成功则是将该网站翻译成所有 WMO 语言，通过 HKO 的技术支持以及瑞士与 WMO 之间的联合融资使其成为可能，这将使全球更多的专家能够访问《云图集》。

CIMO 与其他技术委员会和区域协会

9. 此外，在 WIGOS 的背景下，近年来 CIMO 与区域协会（RA）和其他 WMO 技术委员会之间开展了良好的合作。如前所述，与其他技术委员会的合作是更新《CIMO 指南》的关键，以便用于制定 WMO-ISO 通用标准，例如 WMO 固体降水比对试验（SPICE）。重点关注区域仪器中心（RIC）的评估以支持区域协会，以及关注 WIGOS RA 实施计划中的相关活动。拟议的 CIMO 新结构将进一步解决与区域协会更密切合作的持续需求，寻求协同作用以避免重复工作并确保 CIMO 的成果可满足用户要求。其中的一个很好的例子就是在 CIMO 的倡导下，与 CBS 建立了两个计划间专家组，一个是 CIMO 牵头的业务天气雷达专家组，另一个是由 CBS 牵头的飞机测量专家组。IPET-OWR 的建立有利于将不同小组的天气雷达专家汇集起来，促进协同作用并更好地利用资源和专业知识。它现在代表了一个强大且公认的专家团体，在协调和扩展全球天气雷达数据交换方面发挥着重要作用，预计会对提供给用户的服务产生重大影响。

观测能力

10. 主席赞扬 CIMO 能力任务组成员以高效和有效的方式制定了针对仪器和观测人员的能力：这些能力是针对开展气象观测的人员、负责安装和维护仪器的人员、执行仪器定标的人员以及管理观测计划和网络的人员。高级别的能力已被纳入《WMO 技术规则》（WMO-No. 49）第五部分第一卷，详细的能力将被纳入上述提到的 2018 年版《CIMO 指南》中。

CIMO 与 HMEI

11. 将通过水文气象设备行业协会（HMEI）继续加强与仪器制造商的合作。主席感谢许多 HMEI 专家，感谢他们为 CIMO ET 活动和会议、培训研讨会和仪器比对做出了积极贡献。

12. 与 HMEI 合作编写 AWS 招标规范文件模板受到特别赞扬。在 CIMO 管理小组进行详细审查之前，HMEI 在世界银行的支持下进行了初步编写，从澳大利亚气象局借调的专家也提供了协助。招标模板为参与 AWS 采购流程的会员提供了一个有用的工具，并已可在网站上查询，供会员提供反馈。会员的反馈对于确定该工具的有用性以及决定如何进一步改进是至关重要的。

CIMO 与 ISO

13. WMO 与国际标准化组织（ISO）在制定 ISO/WMO 通用技术标准方面继续开展成功的合作，近期出版了外差脉冲多普勒激光雷达开展地基风遥感的标准（ISO 激光雷达系列：ISO 28902-2：2017，第 2 部分），还完成了天气雷达的标准（第 1 部分：系统性能和规范：ISO 19926-1）。CIMO 已同意推进制定地基风遥感的新标准 – 雷达风廓线仪（ISO 23032）和制定另一项地基气象参数遥感的标准 - 粒子背向散射激光雷达（ISO 28902-4）。还就修订一些其他与气象和水文仪器有关的标准与 ISO 继续开展合作。

CIMO 与 BIPM 以及计量界

14. CIMO 与计量界之间已在多个不同层面上开展了合作。主席代表 CIMO 参加了 EURAMET 研究委员会及其环境任务组。BIPM 专家参与了几个 CIMO 专家组，并为这些专家组的工作和成果做出了非常积极的贡献。位于伦敦（英国）的国家物理实验室主办了 CIMO 辐射基准任务组的简化会议，BIPM 代表也出席了会议，并对该任务组的工作产生了非常积极的影响。BIPM 专家已经通过 CIMO 向 WMO 要求获得一份 WMO 希望计量界开展工作的关键主题清单，计量界在制定研究计划和项目时可以参考这些主题，例如在 EMPIR 项目的背景下。在 EURAMET MeteoMet 项目的背景下开展了一些活动，这使得欧洲计量学和气象专家之间的关系更加密切。在欧洲组织了一次实验室间比较，所有六区协的 RIC 和许多 NMHS 校准实验室都参与了比较，并且在比对过程中制定的程序现在被用于二区协和五区协的另一次实验室间比较活动。

固体降水比对试验（SPICE）

15. 近期，WMO 固体降水比对实验（SPICE）项目的最终报告已作为 IOM 报告予以发布。如果没有所有团队成员和参与制造商的自愿合作，此次比对是不可能取得如此大的成功。Rodica Nitu 女士作为 SPICE 项目经理，因其领导才能而受到表彰。

第十二届国际直接辐射仪比较（IPC-12）和第二届国际大气辐射表比对（IPgC-2）

16. 第十二届国际直接辐射仪比较（IPC-12）于 2015 年在瑞士达沃斯的物理气象观测台/世界辐射中心（PMOD/WRC）举行，同时还举行了第二届国际大气辐射表比对（IPgC-2）。两次比对再次清楚地证明了短波和长波辐射测量的不确定性和可追溯性取得了显著的改善。两次比对的成功举行以及迅速公布结果都归功于所有 PMOD/WRC 达沃斯工作人员，他们在 Wolfgang Finsterle 博士（IPC-12）和 Julian Groebner 博士（IPgC-2）的出色领导下完成了任务。

CIMO 结构

17. CIMO-15 对 CIMO 的结构和职责进行了重大修改，以反映会员不断变化的优先重点以及 CIMO 对 WIGOS 的预期贡献，CIMO-16 仅做了一些微小调整以填补空白并提高效率。向当前届会提出了一些结构修改建议，以进一步提高效率，特别是为了更好地在 2019 年第十八次世界气象大会（Cg- 18）上进行的 WMO 技术委员会重组中确定本委员会的结构。CIMO 管理组在过去几个月的大部分工作都明确旨在改进委员会的工作机制，使其能够在即将到来的大数据和公私合作新环境中做好准备，为 WMO 会员提供最佳服务。

结束语

18. 最后，主席对所有 CIMO 专家表示诚挚的感谢和致敬，感谢他们为休会期间开展的各种活动做出了贡献，以确保会员使用的观测系统和整体观测质量得到持续改进。他通报大家，其至今已经完成了第二个任期，并将辞去委员会主席的职务。他鼓励他的继任者继续积极支持将该委员会过渡到新的 WMO 治理结构。

———————————

Organisation météorologique mondiale

COMMISSION DES INSTRUMENTS ET DES MÉTHODES D'OBSERVATION

Dix-septième session
Amsterdam, Pays-Bas, 12–16 octobre 2018

CIMO-17/INF. 2.1(1)
Présenté par:
Secrétaire général
11.IX.2018

RAPPORT DU PRÉSIDENT DE LA COMMISSION

Introduction

1. Le président a remercié l'Institut météorologique royal des Pays-Bas (KNMI) d'avoir proposé d'accueillir la dix-septième session de la Commission des instruments et des méthodes d'observation (CIMO-17) à Amsterdam, du 12 au 16 octobre 2018, ainsi que la Conférence technique de l'OMM sur les instruments et les méthodes d'observation météorologique et environnementale (TECO-2018), du 8 au 11 octobre 2018. La Conférence a eu lieu parallèlement au Forum SATCOM, à la conférence de l'OMM sur l'entreprise météorologique mondiale et au salon Meteorological Technology World Expo 2018 organisé par UKi Media and Events. Cela montre bien l'intérêt des partenariats entre l'OMM et le secteur privé et en particulier les organisateurs du salon et les exposants. Cette série de manifestations est une occasion unique de développer les capacités, puisqu'elle permet un échange d'expériences entre Services météorologiques et hydrologiques nationaux (SMHN) et avec des partenaires du secteur privé.

Vision et mission de la CIMO

2. Les membres du Groupe de gestion de la CIMO ont souscrit à la révision récente de la structure de gouvernance de l'OMM et notamment du plan visant à améliorer la structure des commissions techniques de l'Organisation pour en accroître l'efficacité. L'évolution des nouvelles technologies et sources de données a lieu à un rythme et à une échelle sans précédent, souvent sans que l'OMM et ses Membres puissent la maîtriser. En outre, il est de plus en plus nécessaire pour l'Organisation de conclure des partenariats public-privé afin d'assurer au mieux les services qu'exigent ses Membres. Sous la direction du Vice-Président, M. Bruce Forgan, le Groupe de gestion de la CIMO a élaboré un énoncé de mission et des perspectives d'avenir pour les mesures environnementales au sein du Système mondial intégré des systèmes d'observation de l'OMM (WIGOS), lesquels sont axés sur des mesures adaptées au but visé qui, indépendamment de la future structure des commissions techniques, permettront aux activités principales de la CIMO de se poursuivre. L'élaboration d'orientations sur des mesures adaptées au but visé représente un réel changement d'attitude, sachant que pour certaines applications, des capteurs plus économiques, des procédures simplifiées ou des données différentes peuvent suffire. Les perspectives d'avenir vont guider le recensement d'activités prioritaires pour la CIMO, mais aussi l'évolution de la structure de gouvernance de l'OMM. La Commission a adopté un rôle prééminent en œuvrant, avec les autres commissions techniques et les conseils régionaux, à l'élaboration d'un nouveau modèle structurel pour l'OMM, qui garantisse que tous les besoins en matière de mesures seront pris en compte dans la nouvelle structure.

Évolution de la CIMO de 2014 à 2018

3. Les activités réalisées pendant l'intersession par le Groupe de gestion, les équipes d'experts, les équipes spéciales et les responsables thématiques ont été particulièrement précieuses pour la CIMO, ainsi que l'apport des Membres qui ont accueilli des comparaisons, des réunions d'experts et d'autres manifestations de la Commission. Sans cet apport, la CIMO n'aurait pu obtenir les résultats qu'elle a atteints. Depuis sa seizième session, la Commission s'est concentrée sur les sept priorités de l'OMM: le Système mondial intégré des systèmes

d'observation de l'OMM (WIGOS), le Cadre mondial pour les services climatologiques (CMSC), la réduction des risques de catastrophe, l'assistance météorologique à la navigation aérienne, les régions polaires et de haute montagne, le développement des capacités et la gouvernance de l'OMM. Ces progrès peuvent être attribués directement aux efforts des experts de la CIMO.

TECO-2016 et TECO-2018

4. La Conférence technique 2016 de la CIMO (TECO-2016) s'est tenue parallèlement au salon Meteorological Technology World Expo 2016, à la deuxième Conférence internationale sur la métrologie appliquée à la météorologie et au climat (MMC-2016) et au premier Forum international d'utilisateurs de systèmes de télécommunication par satellite (SatCom-2016), à Madrid, en Espagne, à l'aimable invitation du Représentant permanent de l'Espagne auprès de l'OMM, M. Miguel Angel Lopez Gonzalez. Environ 400 personnes ont participé aux quatre jours de conférence. Après celle-ci, le Secrétariat de l'OMM a distribué un questionnaire aux participants. Les résultats de celui-ci ont été très positifs et ont permis de comprendre ce qui a bien fonctionné et ce qui peut être amélioré. Vu que la CIMO cherche constamment à améliorer les choses, son président a recommandé que les représentants des membres de la Commission qui ont participé à la TECO-2018 remplissent le questionnaire qui leur a été distribué.

Conférence internationale sur les stations météorologiques automatiques

5. La CIMO a dirigé, en collaboration avec la Commission des systèmes de base (CSB), l'organisation de la Conférence internationale sur les stations météorologiques automatiques (ICAWS-2017). La conférence a eu lieu du 24 au 26 octobre 2017 à Offenbach-sur-le-Main, à l'aimable invitation du Service météorologique allemand (DWD). Le thème de la conférence était «Les stations météorologiques automatiques intelligentes pour l'observation de l'environnement – les SMA au XXIe siècle». La conférence, particulièrement réussie, a réuni une centaine de participants. Outre 35 exposés et 22 présentations d'affiches, trois séances de discussions ont eu lieu sur les thèmes de la formation professionnelle et des besoins en matière de compétences pour l'automatisation des mesures, du travail avec des partenaires autres que les SMHN et des possibilités et des problèmes que présentent les stations météorologiques automatiques à faible prix.

Le CIMO et le WIGOS

6. Depuis le Seizième Congrès météorologique mondial, la mise en œuvre de la phase préopérationnelle du Système mondial intégré des systèmes d'observation de l'OMM (WIGOS) et le développement des perspectives du WIGOS à l'horizon 2040 ont connu des progrès sensibles. M. Calpini a coprésidé le Groupe de coordination intercommissions pour le WIGOS (ICG-WIGOS) et plusieurs experts de la CIMO ont contribué aux travaux d'équipes du WIGOS. Le succès de la mise en œuvre récente d'OSCAR est dû largement au rôle de chef de file du président, qui a obtenu des ressources humaines et financières importantes en Suisse. MétéoSuisse a collaboré avec l'OMM pour réaliser ce projet stimulant qui est désormais l'un des fondements du WIGOS. OSCAR, qui contient les métadonnées relatives aux mesures, est à la source d'un suivi de qualité des mesures dans le monde entier.

Guide des instruments et des méthodes d'observation météorologiques

7. Le Guide est désormais disponible dans d'autres langues de l'OMM. L'apport de la CIMO au WIGOS s'est traduit par la collaboration avec d'autres programmes de l'OMM, l'Organisation internationale de normalisation (ISO), le Bureau international des poids et mesures (BIPM) et l'Association des fabricants d'équipements hydrométéorologiques (HMEI) en vue de la préparation d'une nouvelle édition du *Guide des instruments et des méthodes d'observation météorologiques* (OMM-N° 8, Guide de la CIMO), par exemple en rédigeant une toute nouvelle partie du Guide sur la mesure des variables de la cryosphère, en y incluant une nouvelle norme commune OMM-ISO, en améliorant l'orientation élaborée en collaboration avec

le projet EURAMET MeteoMet pour organiser des comparaisons interlaboratoires et pour mesurer les incertitudes liées à diverses classifications des sites. Le Comité de rédaction de la CIMO a fait d'importants progrès en vue de produire la version préliminaire de l'édition 2018 du Guide, qui inclut plusieurs mises à jour et/ou chapitres entièrement révisés qui ont été rédigés et/ou examinés par des équipes d'experts de la Commission. Le président a appelé les Membres à veiller activement à ce que les éditions actualisées soient traduites.

Mise en place sur le Web d'une nouvelle édition de l'Atlas international des nuages

8. La publication sur le Web de la nouvelle édition de l'*Atlas international des nuages* lors de la Journée météorologique mondiale 2017 a suscité une réaction enthousiaste du public et des professionnels. Élaboré en collaboration avec l'Observatoire de Hong Kong et hébergé par celui-ci, l'Atlas a obtenu depuis l'*ASLI Choice Science Award* de 2017 de l'Atmospheric Science Librarians International (ASLI) pour «l'initiative visionnaire de créer une version actualisée en ligne de cet ouvrage réputé». Le succès de la nouvelle édition est dû largement au dévouement dont ont fait preuve pendant longtemps tous les membres de l'équipe spéciale chargée du projet. Autre succès à venir, l'Atlas est en train d'être traduit dans toutes les langues de l'OMM grâce au soutien technique de l'Observatoire et au financement commun de la Suisse et de l'OMM, traduction qui rendra l'Atlas accessible à de nombreux autres experts du globe.

La CIMO, les autres commissions techniques et les conseils régionaux

9. Toujours dans le contexte du WIGOS, on a observé, au cours des dernières années, une bonne coopération entre la CIMO d'une part et les conseils régionaux et les autres commissions techniques d'autre part. La coopération avec les autres commissions techniques a été essentielle pour la mise à jour du Guide de la CIMO, comme nous l'avons noté précédemment, pour l'élaboration de normes communes OMM-ISO et, par exemple, pour la comparaison OMM des systèmes de mesure des précipitations solides (SPICE). L'accent a été mis notamment sur l'évaluation des centres régionaux d'instruments à l'appui des conseils régionaux et sur leurs activités connexes pour les plans de mise en œuvre du WIGOS dans les Régions. La nouvelle structure proposée pour la CIMO permettra de continuer de répondre au besoin constant d'une collaboration plus étroite avec les conseils régionaux à la recherche de synergies afin d'éviter les doubles emplois et de garantir que les résultats de la Commission correspondent aux besoins des usagers. La création, à l'instigation de la CIMO, de deux équipes d'experts interprogrammes CSB-CIMO, l'une consacrée aux radars météorologiques opérationnels, dirigée par la CIMO, et l'autre consacrée aux mesures d'aéronefs, qui sera dirigée par la CSB, en est un bon exemple. L'établissement de l'Équipe d'experts interprogrammes de l'OMM pour les radars météorologiques opérationnels (IPET-OWR) a permis de réunir des experts des radars météorologiques de diverses équipes, de favoriser les synergies et de mieux exploiter les ressources et les compétences. Nous avons désormais affaire à une communauté d'experts dynamique et reconnue jouant un rôle important dans la coordination et le développement de l'échange de données sur les radars météorologiques au niveau mondial qui devrait avoir des incidences sensibles sur les services proposés aux utilisateurs.

Compétences en matière d'observations

10. Le président a félicité les membres de l'Équipe spéciale de la CIMO sur les compétences pour l'efficacité avec laquelle ils ont défini les compétences des spécialistes des instruments et des observations. Ces compétences sont celles du personnel chargé des observations météorologiques, du personnel chargé de l'installation et de l'entretien des instruments, du personnel chargé de l'étalonnage des instruments et du personnel chargé de la gestion des programmes et des réseaux d'observation. Les compétences de haut niveau ont été insérées dans le Volume I, Partie V du *Règlement technique de l'OMM* (OMM-N° 49), tandis

que les compétences détaillées figurent dans l'édition 2018 susmentionnée du Guide de la CIMO.

La CIMO et la HMEI

11. Une collaboration étroite se poursuit avec les fabricants d'instruments par le biais de l'Association des fabricants d'équipements hydrométéorologiques (HMEI). Le président a remercié les nombreux experts de l'Association qui ont contribué aux activités, aux réunions, aux ateliers de formation et aux comparaisons d'instruments des équipes d'experts de la CIMO.

12. La collaboration avec la HMEI à propos de l'élaboration du modèle de document sur les conditions des appels d'offre pour les stations météorologiques automatiques a été particulièrement louée. Le modèle a été produit au départ par la HMEI avec le soutien de la Banque mondiale avant que le Groupe de gestion de la CIMO, assisté par un expert détaché financé par le Service météorologique australien, ne procède à une étude détaillée de celui-ci. Le modèle, qui comprend un outil utile aux Membres qui procèdent à l'acquisition de stations météorologiques automatiques, est disponible sur le site Web de la Commission. Les informations en retour seront essentielles pour déterminer l'utilité de l'outil et pour décider des moyens de l'améliorer.

La CIMO et l'ISO

13. Une collaboration fructueuse se poursuit entre l'OMM et l'Organisation internationale de normalisation (ISO) à propos de l'élaboration de normes techniques communes ISO-OMM, d'où la publication récente d'une norme de télédétection du vent par lidar Doppler pulsé hétérodyne au sol (partie 2 de la série ISO sur les lidars: ISO 28902-2:2017) et de la finalisation d'une norme sur les radars météorologiques (partie 1: Fonctionnement et spécification: ISO 19926-1). La CIMO est convenue de contribuer à l'élaboration d'une nouvelle norme sur la télédétection du vent au sol – radar profileur de vent (ISO 23032) et d'une norme sur la télédétection au sol de paramètres météorologiques – lidar de rétrodiffusion des particules (ISO 28902-4). La collaboration se poursuit également avec l'ISO à propos de la révision de diverses autres normes liées aux instruments météorologiques et hydrologiques.

La CIMO, le BIPM et le secteur de la métrologie

14. La CIMO a collaboré avec le secteur de la métrologie à divers niveaux. Le président de la Commission a représenté celle-ci auprès du Conseil de recherche d'EURAMET et de son Groupe spécial sur l'environnement. Des experts du BIPM ont apporté une précieuse contribution aux activités et aux résultats de plusieurs groupes d'experts de la CIMO aux travaux desquels ils ont participé. Le Laboratoire national de physique de Londres (Royaume-Uni) a accueilli une réunion restreinte de l'Équipe spéciale de la Commission sur les références radiométriques, à laquelle ont participé des représentants du BIPM, qui ont eu une incidence très positive sur les travaux de l'Équipe. Par l'intermédiaire de la CIMO, les experts du BIPM ont demandé à l'OMM une liste de sujets importants auxquels l'Organisation souhaiterait voir travailler le secteur de la métrologie, à laquelle ce dernier pourrait se référer lorsqu'il élabore des propositions et des projets de recherche, par exemple dans le contexte des projets EMPIR. Le projet MeteoMet d'EURAMET a donné lieu à diverses activités qui ont permis de resserrer nettement les liens entre experts européens de la métrologie et de la météorologie. Des comparaisons interlaboratoires ont été organisées partout en Europe avec la participation de tous les centres régionaux d'instruments de la Région VI et de nombreux laboratoires d'étalonnage des SMHN de la Région. Les procédures élaborées lors de ces comparaisons sont maintenant appliquées à d'autres comparaisons interlaboratoires réalisées dans les Régions II et V.

Comparaison OMM des systèmes de mesure des précipitations solides (SPICE)

15. Le rapport final sur la Comparaison OMM des systèmes de mesure des précipitations solides (SPICE) a été publié récemment dans la série de rapports sur les instruments et les méthodes d'observation. Cette comparaison fructueuse n'aurait pu avoir lieu sans la coopération de tous les membres de l'équipe et des fabricants qui y ont participé. Mme Rodica Nitu a été félicitée pour sa conduite éclairée en tant que directrice du programme SPICE.

Douzième Comparaison internationale de pyrhéliomètres (IPC-12) et deuxième Comparaison internationale de pyrgéomètres (IPgC-2)

16. La douzième Comparaison internationale de pyrhéliomètres (IPC-12) a eu lieu à l'Observatoire physico-météorologique de Davos/Centre radiométrique mondial, à Davos (Suisse), en 2015, parallèlement à la deuxième Comparaison internationale de pyrgéomètres (IPgC-2). Cette fois encore, les deux comparaisons ont clairement démontré une réduction sensible de l'incertitude et une amélioration de la traçabilité de la mesure du rayonnement de courtes et de grandes longueurs d'onde. Le personnel de Davos, sous la conduite éclairée de MM. Wolfgang Finsterle (IPC-12) et Julian Groebner (IPgC-2), a permis une excellente conduite des deux comparaisons et une publication rapide de leurs résultats.

Structure de la CIMO

17. La structure et les attributions de la CIMO ont été sensiblement modifiées lors de la quinzième session de la Commission pour traduire les priorités en évolution des Membres et l'apport de la CIMO au WIGOS, et des ajustements mineurs y ont été apportés lors de la seizième session de la Commission pour combler quelques lacunes et en accroître l'efficacité. Plusieurs changements de structure ont été proposés lors de la présente session, toujours pour accroître l'efficacité de la Commission et en particulier pour mieux l'adapter à la restructuration à venir des commissions techniques de l'OMM, qui doit avoir lieu à l'occasion du Dix-huitième Congrès météorologique mondial (Cg-18), en 2019. Une grande partie des activités du Groupe de gestion de la CIMO au cours des derniers mois a visé explicitement l'amélioration des mécanismes de travail de la Commission pour qu'elle rende des services optimaux aux Membres de l'OMM dans le nouveau monde des mégadonnées et des partenariats public-privé.

Observations finales

18. En conclusion, le président a remercié sincèrement l'ensemble des experts de la CIMO ayant contribué aux activités très diverses qui ont eu lieu pendant l'intersession pour assurer l'amélioration constante des systèmes d'observation utilisés par les Membres et la qualité globale des observations. Il a déclaré avoir achevé son second mandat et devoir abandonner ses fonctions de président de la Commission. Il a exhorté son successeur à continuer d'appuyer activement le passage de la Commission à la nouvelle structure de gouvernance de l'OMM.

_____

Всемирная метеорологическая организация

КОМИССИЯ ПО ПРИБОРАМ И МЕТОДАМ НАБЛЮДЕНИЙ

Семнадцатая сессия
Амстердам, Нидерланды, 12—16 октября 2018 г.

CIMO-17/INF. 2.1(1)
Представлен:
Генеральным секретарем
11.IX.2018 г.

ДОКЛАД ПРЕЗИДЕНТА КОМИССИИ

Введение

1. Президент выразил признательность КНМИ за любезное приглашение выступить в качестве принимающей стороны при проведении семнадцатой сессии Комиссии по приборам и методам наблюдений (КПМН-17) в Амстердаме с 12 по 16 октября 2018 г. и Технической конференции ВМО по приборам и методам наблюдений в области метеорологии и окружающей среды (ТЕКО-2018) с 8 по 11 октября 2018 г. ТЕКО-2018 была проведена параллельно с форумом СатКом 2018 г., Конференцией ВМО по глобальной метеорологической отрасли и Всемирной выставкой метеорологических технологий 2018 г., организованной компанией «UKi Media and Events Ltd». Это является примером успеха, который может быть достигнут благодаря партнерским отношениям между ВМО и частным сектором — в частности, организаторами выставки и участниками. Эта серия мероприятий также предоставляет уникальную возможность для развития потенциала, что делает возможным обмен опытом не только между национальными метеорологическими и гидрологическими службами (НМГС), но и с партнерами из частного сектора.

Перспективное видение и общая задача КПМН

2. Члены группы управления (ГУ) КПМН положительно восприняли недавний обзор структуры управления ВМО, в частности план по совершенствованию структуры технических комиссий Организации для повышения эффективности и действенности. Происходит стремительное развитие новых технологий и источников данных в невиданных ранее масштабах, многие из которых не могут контролироваться ВМО и ее Членами. Также существует растущая потребность в том, чтобы ВМО приняла идею государственно-частных партнерств для оптимизации предоставления обслуживания, необходимого Членам. Под руководством вице-президента д-ра Форгана ГУ КПМН разработала общую задачу и заявление о перспективном видении будущего производства измерений в области окружающей среды в рамках ИГСНВ, основанные на предоставлении соответствующих целевому назначению данных измерений, что обеспечит возможность продолжения основной деятельности КПМН вне зависимости от будущей структуры технических комиссий. Разработка руководящих принципов по соответствующим целевому назначению данным измерений знаменует собой настоящее смещение акцента в признание того, что для некоторых сфер применения более дешевые датчики, более простые процедуры или альтернативные данные могут оказаться достаточными. Это перспективное видение будет не только выступать в качестве руководства при определении приоритетных видов деятельности для КПМН, но также оказывать поддержку изменению структуры управления ВМО. КПМН также взяла на себя ведущую роль в работе с другими техническими комиссиями и региональными ассоциациями по оказанию помощи в разработке новой модели структуры ВМО, обеспечивающей должный учет всех потребностей в области измерений в рамках новой структуры.

Прогресс КПМН за период 2014—2018 гг.

3. Работа, проделанная в межсессионный период Группой управления, экспертными группами, целевыми группами и руководителями тем, была особенно ценной для КПМН, равно как и вклад, внесенный теми Членами, которые выступили

принимающей стороной при проведении взаимных сравнений, совещаний экспертов и других мероприятий КПМН в межсессионный период. Без таких вкладов со стороны Членов КПМН не смогла бы добиться полученных результатов. Прогресс, достигнутый Комиссией со времени ее шестнадцатой сессии, в области оказания поддержки семи приоритетам Организации (Интегрированная глобальная система наблюдений ВМО (ИГСНВ), Глобальная рамочная основа для климатического обслуживания (ГРОКО), снижение рисков бедствий (СРБ), авиационное метеорологическое обслуживание, мониторинг в полярных и высокогорных регионах, развитие потенциала и управление ВМО) был непосредственно связан с усилиями экспертов КПМН.

ТЕКО-2016 и ТЕКО-2018 КПМН

4. Техническая конференция КПМН в 2016 г. (ТЕКО-2016) была организована совместно со Всемирной выставкой метеорологических технологий 2016 г., вторым Международным семинаром по метрологии для метеорологии и климата (ММК-2016) и первым Международным форумом пользователей телекоммуникационных систем спутниковых данных (СатКом-2016) в Мадриде, Испания, по любезному приглашению Постоянного представителя Испании при ВМО г-на Мигеля-Анхеля Лопеса-Гонсалеса. За четыре дня работы ТЕКО-2016 в конференции приняло участие в общей сложности около 400 человек. После конференции Секретариатом ВМО был организован опрос участников конференции. Результаты опроса оказались чрезвычайно положительными и помогли понять, что получилось хорошо, а что можно было улучшить. В связи с непрерывным стремлением КПМН к совершенствованию президент рекомендовал представителям Членов КПМН, принявшим участие в ТЕКО-2018, заполнить опросник за 2018 год, который им были разослан.

Конференция по АМС

5. В сотрудничестве с Комиссией по основным системам (КОС) КПМН взяла на себя ведущую роль в организации Международной конференции по автоматическим метеорологическим станциям 2017 г. (МКАМС-2017). Конференция проводилась в Оффенбахе-на-Майне, Германия, по любезному приглашению Метеорологической службы Германии (ДВД) с 24 по 26 октября 2017 г. по теме «Автоматические метеорологические станции для понимания окружающей среды — АМС в XXI веке». Конференция прошла с особым успехом, собрав около 100 участников. В дополнение к 35 устным и 22 стендовым докладам были проведены три дискуссионных сессии, посвященные требованиям к обучению и компетенциям в области автоматизации измерений, работе с данными, получаемыми не от НМГС (партнеров), а также возможностям и угрозам, создаваемым недорогими АМС.

КПМН и ИГСНВ

6. Со времени Кг-16 был достигнут значительный прогресс в осуществлении предоперативного этапа Интегрированной глобальной системы наблюдений ВМО (ИГСНВ) и разработке перспективного видения ИГСНВ до 2040 года. Профессор Кальпини выступил сопредседателем Межпрограммной координационной группы по ИГСНВ (МКГ-ИГСНВ), а ряд экспертов КПМН внесли вклад в работу групп ИГСНВ. Недавнее успешное осуществление ОСКАР было в значительной мере обусловлено ведущей ролью, взятой на себя президентом в обеспечении наличия значительных людских и финансовых ресурсов внутри Швейцарии. МетеоСвисс работает в сотрудничестве с ВМО над завершением этого сложного проекта, который в настоящее время является одним из краеугольных камней ИГСНВ. ОСКАР предоставляет метаданные, связанные с измерениями, и служит источником для мониторинга качества измерений во всем мире.

Руководство ВМО по метеорологическим приборам и методам наблюдений

7. Руководство КПМН теперь доступно на других языках ВМО. Конкретные вклады КПМН в ИГСНВ воплотились в сотрудничество с другими программами ВМО, ИСО, МБМВ и ПГМО при подготовке новой редакции *Руководства ВМО по метеорологическим приборам и методам наблюдений* (ВМО-№ 8, Руководство КПМН), например, за счет составления совершенно новой части Руководства, посвященной измерению криосферной переменной, включения нового общего стандарта ВМО/ИСО и усовершенствованных руководящих принципов, разработанных в сотрудничестве с проектом ЕВРАМЕТ «MeteoMet», в области организации межлабораторных сравнений и неопределенностей измерений, связанных с различными классификациями площадок. Редакционный совет КПМН добился значительного прогресса при подготовке предварительного издания 2018 года Руководства КПМН, которое включает ряд обновлений и/или полностью пересмотренных глав, разработанных и/или рассмотренных экспертными группами КПМН. Президент призвал Членов к активному участию для обеспечения того, чтобы также был осуществлен перевод обновленных изданий.

Новое Интернет-издание Международного атласа облаков

8. Публикация нового Интернет-издания Международного атласа облаков, представленного во Всемирный метеорологический день 2017 года, вызвала бурную реакцию со стороны общественности и специалистов. Атлас, разработанный в сотрудничестве с Гонконгской обсерваторией (ГКО), которая предоставляет для него услуги хостинга, с тех пор был удостоен награды «ASLI Choice Science Award» за 2017 год, присуждаемой организацией «Atmospheric Science Librarians International» (ASLI), за «перспективную инициативу по созданию обновленной Интернет-версии этого выдающегося труда». Успех нового издания во многом стал возможен благодаря самоотверженной работе, осуществляемой на протяжении продолжительного периода времени всеми членами целевой группы, отвечающей за завершение данного проекта. Будущий успех будет связан с завершением перевода веб-сайта на все языки ВМО, что станет возможным благодаря технической поддержке со стороны ГКО и совместному финансированию Швейцарии и ВМО, в результате чего Атлас станет доступным для значительно большего числа экспертов во всем мире.

КПМН и другие технические комиссии, и региональные ассоциации

9. Также в контексте ИГСНВ в последние годы осуществляется эффективное сотрудничество между КПМН и региональными ассоциациями (РА) и другими техническими комиссиями ВМО. Это сотрудничество с другими техническими комиссиями сыграло ключевую роль в обновлении Руководства КПМН, как отмечалось ранее, для разработки общих стандартов ВМО-ИСО и, например, для Эксперимента ВМО по взаимному сравнению измерений твердых осадков (ЭВСТО). Особое внимание было уделено оценке региональных центров по приборам (РЦП) в поддержку региональных ассоциаций и их соответствующей деятельности в рамках планов осуществления РА ИГСНВ. Предлагаемая новая структура КПМН будет способствовать дальнейшему рассмотрению вопроса о сохраняющейся потребности в более тесном сотрудничестве с региональными ассоциациями для поиска синергизма во избежание дублирования работы и для обеспечения соответствия результатов деятельности КПМН требованиям пользователей. Хорошим примером этого является создание по инициативе КПМН двух межпрограммных экспертных групп (МПЭГ) с участием КОС, одна из которых будет заниматься оперативными метеорологическими радиолокаторами (ОМР) под руководством КПМН, а другая — измерениями с воздушных судов под руководством КОС. Создание МПЭГ-ОМР позволило собрать под одной крышей специалистов в области метеорологических радиолокаторов из различных групп, способствуя усилению эффекта синергизма и более оптимальному использованию ресурсов и экспертных знаний. В настоящее время она представляет собой авторитетное и широко известное сообщество экспертов, играющее важную роль в координации и расширении обмена данными

метеорологических радиолокаторов во всем мире, что, как ожидается, окажет значительное воздействие на обслуживание, предоставляемое пользователям.

Компетенции в области наблюдений

10. Президент выразил благодарность членам целевой группы КПМН по компетенциям за эффективный и действенный подход, осуществленный ими при разработке компетенций для специалистов, занятых в областях, связанных с приборами и наблюдениями: компетенции предназначены для персонала, производящего метеорологические наблюдения; персонала, осуществляющего установку и обслуживание приборов; персонала, выполняющего калибровку приборов; и персонала, осуществляющего управление программами и сетями наблюдений. Компетенции высокого уровня были включены в часть V тома I *Технического регламента ВМО* (ВМО-№ 49), при этом подробные компетенции подлежат включению в вышеупомянутое издание 2018 года Руководства КПМН.

КПМН и ПГМО

11. Продолжается тесное сотрудничество с производителями приборов по линии Ассоциации производителей гидрометеорологического оборудования (ПГМО). Президент поблагодарил тех многочисленных экспертов ПГМО, которые внесли положительный вклад в деятельность ЭГ КПМН и ее совещания, учебно-практические семинары и взаимные сравнения приборов.

12. С особым одобрением было отмечено сотрудничество с ПГМО в области разработки шаблона документации о тендерных спецификациях для АМС. На первоначальном этапе его разработкой занималась ПГМО при поддержке Всемирного банка, а затем подробный анализ был проведен Группой управления КПМН при содействии прикомандированного эксперта, получившего поддержку со стороны Австралийского бюро метеорологии. Шаблон тендера представляет собой полезный инструмент для Членов, участвующих в процессах закупок АМС, и был размещен на веб-сайте для комментариев Членов. Эти комментарии будут иметь решающее значение при определении полезности данного инструмента и принятии решений о его дальнейшем совершенствовании.

КПМН и ИСО

13. Продолжается успешное сотрудничество между ВМО и Международной организацией по стандартизации (ИСО) в области разработки общих технических стандартов ИСО/ВМО, что привело к недавней публикации стандарта по наземному дистанционному зондированию параметров ветра с использованием гетеродинных импульсных доплеровских лидаров (часть 2 серии ИСО по лидарам: ISO 28902-2:2017) и завершению работы над стандартом по метеорологическим радиолокаторам (часть 1: «System performance and specification» (Эксплуатационные показатели и технические характеристики систем): ISO 19926-1). КПМН согласилась внести свой вклад в разработку нового стандарта по наземному дистанционному зондированию параметров ветра с использованием радиолокационных ветровых профилометров (ISO 23032) и еще одного по наземному дистанционному зондированию метеорологических параметров с помощью лидара обратного рассеяния частиц (ISO 28902-4). Также продолжается сотрудничество с ИСО в области пересмотра ряда других стандартов, связанных с метеорологическими и гидрологическими приборами.

КПМН, МБМВ и метрологическое сообщество

14. Сотрудничество между КПМН и метрологическим сообществом осуществлялось на нескольких различных уровнях. Президент представлял КПМН в Исследовательском

совете ЕВРАМЕТ и его целевой группе по окружающей среде. Эксперты МБМВ были привлечены к работе нескольких экспертных групп КПМН и внесли весьма ценный вклад в их работу и результаты. Национальная физическая лаборатория в Лондоне (Соединенное Королевство) выступила в качестве места проведения совещания в сокращенном составе Целевой группы КПМН по радиационным эталонам, в состав которой вошли представители МБМВ, оказавшие чрезвычайно положительное воздействие на работу группы. Через КПМН эксперты МБМВ запросили у ВМО список ключевых тем, которыми ВМО хотелось бы, чтобы метрологическое сообщество занялось, и на которые сообщество могло бы ссылаться при разработке научных предложений и проектов, например в контексте проектов «EMPIR». В рамках проекта «MeteoMet» ЕВРАМЕТ был проведен ряд мероприятий, которые привели к установлению гораздо более тесных текущих связей между экспертами в областях метрологии и метеорологии в Европе. По всей Европе было организовано проведение межлабораторного сравнения с участием всех РЦП РА VI и многих калибровочных лабораторий НМГС, и процедуры, разработанные в ходе этого сравнения, в настоящее время применяются в ходе другого межлабораторного сравнения в РА II и V.

Эксперимент по взаимному сравнению измерений твердых осадков (ЭВСТО)

15. Окончательный отчет об Эксперименте ВМО по взаимному сравнению твердых осадков (ЭВСТО) был недавно опубликован в виде отчета по ПМН. Это в высшей степени успешное взаимное сравнение не состоялось бы без желания к сотрудничеству со стороны всех членов группы и участвующих производителей. Г-жа Родика Ниту получила благодарность за свое умелое руководство в качестве менеджера программы ЭВСТО.

Двенадцатое международное сравнение пиргелиометров (МСП-XII) и Второе международное взаимное сравнение пиргеометров (МСПг-2)

16. Двенадцатое международное сравнение пиргелиометров (МСП-12) было проведено в Давосской физико-метеорологической обсерватории/Мировом радиационном центре (ПМОД/МРЦ) в Давосе, Швейцария, в 2015 г. параллельно со Вторым международным взаимным сравнением пиргеометров (МСПг-2). Эти два взаимных сравнения вновь наглядно продемонстрировали существенное улучшение в отношении неопределенности и прослеживаемости измерений коротковолнового и длинноволнового излучения. Превосходное проведение двух взаимных сравнений и оперативное опубликование результатов стали возможными благодаря действиям всех сотрудников ПМОД/МРЦ в Давосе под умелым руководством д-ра Вольфганга Финстерле (МСП-XII) и д-ра Джулиана Грёбнера (МСПг-2).

Структура КПМН

17. Структура и круг обязанностей КПМН были существенно изменены на КПМН-XV для отражения меняющихся приоритетов Членов и ожидаемого вклада КПМН в ИГСНВ, в то время как на КПМН-16 были внесены лишь незначительные коррективы для заполнения некоторых пробелов и повышения эффективности. На рассмотрение нынешней сессии предлагается внести ряд изменений в структуру с целью дальнейшего повышения эффективности и, в частности, для того, чтобы лучше подготовить Комиссию к предстоящей реструктуризации технических комиссий ВМО, которая, как ожидается, состоится на Восемнадцатом Всемирном метеорологическом конгрессе (Кг-18) в 2019 г. Значительная часть работы Группы управления КПМН на протяжении предыдущих нескольких месяцев была явным образом направлена на совершенствование рабочих механизмов Комиссии, с тем чтобы она была готова предоставлять оптимальное обслуживание Членам ВМО в грядущем новом мире больших данных и взаимодействия государственного и частного секторов.

Заключительные замечания

18. В заключение президент выразил свою искреннюю благодарность и признательность всем экспертам КПМН, которые внесли свой вклад в большое разнообразие мероприятий, проведенных в межсессионный период для обеспечения постоянного совершенствования систем наблюдений, используемых Членами, и общего качества наблюдений. Он сообщил, что он завершил свой второй срок полномочий и собирается уходить с поста президента Комиссии. Он призвал своего преемника продолжать оказывать активную поддержку переходу Комиссии к новой структуре управления ВМО.

_____

Organización Meteorológica Mundial

COMISIÓN DE INSTRUMENTOS Y MÉTODOS DE OBSERVACIÓN

Decimoséptima reunión
Ámsterdam, Países Bajos, 12 a 16 de octubre de 2018

CIMO-17/INF. 2.1(1)
Presentado por:
Secretario General
11.IX.2018

INFORME DEL PRESIDENTE DE LA COMISIÓN

Introducción

1. El presidente expresó su agradecimiento al Instituto Real de Meteorología de los Países Bajos (KNMI) por su amable invitación para acoger la decimoséptima reunión de la Comisión de Instrumentos y Métodos de Observación (CIMO) en Ámsterdam del 12 al 16 de octubre de 2018, y la Conferencia Técnica sobre Instrumentos y Métodos de Observación Meteorológicos y Medioambientales (TECO 2018) de la Organización Meteorológica Mundial (OMM), del 8 al 11 de octubre de 2018. La TECO 2018 se celebró conjuntamente con el Foro de Usuarios de Sistemas de Telecomunicación de Datos Satelitales de 2018, la Conferencia sobre Entidades del Ámbito de la Meteorología de la OMM y la Exposición Mundial de Tecnología Meteorológica de 2018 organizada por UKi Media and Events. Estas actividades son un claro ejemplo de los excelentes resultados que pueden obtenerse mediante las asociaciones entre la OMM y el sector privado (los organizadores de la exposición, en particular, y los expositores). Esta serie de actividades también ofrece una oportunidad única de desarrollo de la capacidad, que no solo posibilita el intercambio de experiencias entre los Servicios Meteorológicos e Hidrológicos Nacionales (SMHN), sino también con los asociados del sector privado.

Visión y misión de la CIMO

2. Los miembros del Grupo de Gestión de la CIMO han respaldado el reciente examen de la estructura de gobernanza de la OMM, en particular, el plan para estructurar mejor las comisiones técnicas de la Organización con miras a aumentar la eficiencia y la eficacia. Las nuevas tecnologías y fuentes de datos evolucionan con rapidez, a una escala nunca vista, y muchas de ellas no pueden ser controladas por la OMM ni sus Miembros. Asimismo, es cada vez más necesario que la OMM establezca asociaciones entre los sectores público y privado para prestar, con más eficacia, los servicios que requieren los Miembros. El Grupo de Gestión de la CIMO, encabezado por el vicepresidente, el Sr. Forgan, redactó una declaración de misión y visión de futuro con respecto a las mediciones ambientales en el marco del Sistema Mundial Integrado de Sistemas de Observación de la OMM (WIGOS), centrada en la generación de mediciones adecuadas a su finalidad, lo que garantizará que, independientemente de la futura estructura de las comisiones técnicas, se preserve la esencia de la labor de la CIMO. La elaboración de directrices sobre mediciones adecuadas a su finalidad representa un verdadero cambio de orientación, mediante el cual se reconoce que, en el caso de algunas aplicaciones, los sensores más económicos, los procedimientos simplificados o los datos alternativos pueden ser suficientes. La visión no solo encauzará la determinación de las actividades prioritarias de la CIMO, sino también respaldará la modificación de la estructura de gobernanza de la OMM. La CIMO también ha asumido un papel preponderante en la colaboración con las otras comisiones técnicas y las asociaciones regionales para ayudar a crear un nuevo modelo estructural para la OMM que garantice que todas las necesidades relativas a las mediciones estén satisfechas de forma adecuada en la nueva estructura.

Avances de la CIMO durante el período 2014-2018

3. La labor realizada durante el período entre reuniones por el Grupo de Gestión, los equipos de expertos, los equipos especiales y los líderes temáticos fue particularmente valiosa

para la CIMO, al igual que las contribuciones aportadas por los Miembros que organizaron intercomparaciones, reuniones de expertos y otras actividades de la CIMO durante dicho período. Sin esas contribuciones de los Miembros, los resultados alcanzados por la CIMO no hubieran sido posibles. Los avances logrados por la Comisión desde su decimosexta reunión, en apoyo de las siete prioridades de la Organización, el WIGOS, el Marco Mundial para los Servicios Climáticos, la reducción de riesgos de desastre, los servicios meteorológicos aeronáuticos, la vigilancia de las regiones polares y montañosas, el desarrollo de la capacidad y la gobernanza de la OMM, fueron directamente atribuibles a los esfuerzos desplegados por los expertos de la CIMO.

TECO 2016 y TECO 2018 de la CIMO

4. La Conferencia Técnica de la CIMO de 2016 (TECO 2016) se celebró junto con la Exposición Mundial de Tecnología Meteorológica de 2016, el segundo Taller Internacional sobre Metrología para la Meteorología y la Climatología de 2016 y el primer Foro Internacional de Usuarios de Sistemas de Telecomunicación de Datos Satelitales (SatCom 2016), en Madrid (España), por amable invitación del Representante Permanente de España ante la OMM, el Sr. Miguel Ángel López González. En total, aproximadamente 400 personas asistieron a la TECO 2016, que se llevó a cabo durante cuatro días. Luego de la conferencia, la Secretaría de la OMM organizó una encuesta entre los participantes. Los resultados de la encuesta fueron muy positivos y ayudaron a comprender los aspectos que funcionaron bien y aquellos que podrían mejorarse. Considerando la búsqueda permanente de posibilidades de mejora de la CIMO, el presidente recomendó que los representantes de los Miembros de la CIMO que asistieron a la TECO 2018 completaran la encuesta de 2018 que se les había entregado.

Conferencia Internacional sobre Estaciones Meteorológicas Automáticas

5. La CIMO dirigió la organización, en colaboración con la Comisión de Sistemas Básicos (CSB), de la Conferencia Internacional sobre Estaciones Meteorológicas Automáticas de 2017. La conferencia se celebró en Offenbach am Main (Alemania), por amable invitación del Servicio Meteorológico de Alemania (DWD), del 24 al 26 de octubre de 2017, y el tema de la conferencia fue “Estaciones meteorológicas automáticas para la inteligencia medioambiental. Las estaciones meteorológicas automáticas en el siglo XXI”. La conferencia tuvo resultados muy satisfactorios y atrajo alrededor de 100 participantes. Además de las 35 exposiciones orales y las 22 presentaciones de carteles, se organizaron tres sesiones de debate sobre las necesidades de formación profesional y competencias en materia de automatización de las mediciones, la utilización de datos de asociados distintos de los SMHN, y las oportunidades y amenazas que suponen las estaciones meteorológicas automáticas de bajo costo.

La CIMO y el WIGOS

6. Desde el Decimosexto Congreso Meteorológico Mundial, se ha avanzado notablemente en la aplicación de la fase preoperativa del WIGOS y la elaboración de la visión del WIGOS para 2040. El Sr. Calpini copresidió el Grupo de Coordinación Intercomisiones sobre el WIGOS, y varios expertos de la CIMO colaboraron con los equipos del WIGOS. La reciente aplicación satisfactoria de la herramienta de análisis y examen de la capacidad de los sistemas de observación (OSCAR) se debió, en gran medida, al importante papel que desempeñó el presidente en la obtención de considerables recursos humanos y financieros dentro de Suiza. MeteoSwiss ha colaborado con la OMM para llevar a feliz término este complejo proyecto, que actualmente es uno de los componentes fundamentales del WIGOS. OSCAR proporciona los metadatos relacionados con las mediciones y constituye la fuente de la vigilancia de la calidad de las mediciones en todo el mundo.

Guía de Instrumentos y Métodos de Observación Meteorológicos de la OMM

7. La Guía de la CIMO actualmente está disponible en otros idiomas de la OMM. Las contribuciones específicas de la Comisión al WIGOS se plasmaron en la colaboración con otros programas de la OMM, la Organización Internacional de Normalización (ISO), la Oficina Internacional de Pesos y Medidas (BIPM) y la Asociación de la Industria de Equipos Hidrometeorológicos (HMEI), a fin de preparar una nueva edición de la *Guía de Instrumentos y Métodos de Observación Meteorológicos de la OMM* (OMM-Nº 8, Guía de la CIMO), por ejemplo, mediante la elaboración de una parte completamente nueva de la Guía sobre la medición de la variable de la criosfera, la incorporación de una nueva norma conjunta OMM/ISO y la mejora de las directrices elaboradas en colaboración con el proyecto MeteoMet de la Asociación Europea de Institutos Nacionales de Metrología (EURAMET) sobre la organización de comparaciones entre laboratorios y las incertidumbres en las mediciones relacionadas con las diferentes clasificaciones de emplazamientos. El Consejo Editorial de la Comisión ha logrado importantes avances en la producción de la edición preliminar de 2018 de la Guía de la CIMO, que incluye diversas actualizaciones o capítulos íntegramente revisados que han sido elaborados o examinados por equipos de expertos de la CIMO. El presidente exhortó a los Miembros a que participaran activamente para lograr que se tradujeran las versiones actualizadas.

Nueva edición web del *Atlas Internacional de Nubes*

8. La nueva edición web del *Atlas Internacional de Nubes*, publicada el Día Meteorológico Mundial de 2017, fue recibida con gran entusiasmo por los profesionales y el público en general. El Atlas, elaborado en colaboración con el Observatorio de Hong Kong y alojado por este, ha sido distinguido por Atmospheric Science Librarians International (ASLI) con el premio *ASLI Choice Science Award 2017* por la innovadora iniciativa de crear una versión actualizada en línea de esta prestigiosa obra. El éxito de la nueva edición se debió principalmente a la dedicación demostrada durante un largo período por todos los miembros del equipo especial responsable de este proyecto. Un triunfo futuro será la finalización de la traducción del sitio web a todos los idiomas de la OMM, tarea que es propiciada por el apoyo técnico del Observatorio de Hong Kong y la financiación conjunta de Suiza y la OMM, y permitirá que muchos más expertos de todo el mundo puedan acceder al Atlas.

La CIMO, las otras comisiones técnicas y las asociaciones regionales

9. También en el marco del WIGOS, en los últimos años ha habido una satisfactoria cooperación entre la CIMO y las asociaciones regionales y las otras comisiones técnicas de la OMM. Esta cooperación con las otras comisiones técnicas ha sido decisiva en la actualización de la Guía de la CIMO, como se mencionó anteriormente, para la elaboración de las normas conjuntas OMM-ISO y, por ejemplo, para el Experimento de intercomparación de la precipitación sólida de la OMM (SPICE). Se hizo especial hincapié en la evaluación de los Centros Regionales de Instrumentos en apoyo de las asociaciones regionales y sus actividades conexas en los planes regionales de ejecución del WIGOS. En la nueva estructura propuesta de la CIMO, también se atenderá la constante necesidad de facilitar una cooperación más estrecha con las asociaciones regionales, a fin de establecer sinergias que permitan evitar la duplicación del trabajo y garantizar que los productos de la Comisión satisfagan las necesidades de los usuarios. Un buen ejemplo de ello es la creación, a instancia de la CIMO, de dos equipos de expertos interprogramas con la CSB, uno sobre radares meteorológicos operativos, encabezado por la CIMO, y otro sobre mediciones desde aeronaves, dirigido por la CSB. El establecimiento del Equipo de Expertos Interprogramas sobre Radares Meteorológicos Operativos permitió reunir a expertos en radares meteorológicos de diferentes equipos y fomentar las sinergias y el mejor uso de los recursos y los conocimientos especializados. Actualmente, este equipo es una comunidad de expertos sólida y reconocida que cumple una función importante en la coordinación y la expansión del intercambio de datos de radares meteorológicos a nivel mundial, lo que se prevé que tendrá un gran impacto en los servicios que se brindan a los usuarios.

Competencias en materia de observaciones

10. El presidente elogió a los miembros del Equipo Especial sobre Competencias de la CIMO por la eficiencia y la eficacia con que definieron las competencias pertinentes a los especialistas que trabajan con los instrumentos y las observaciones: las competencias se aplican al personal que realiza observaciones meteorológicas, que instala y mantiene los instrumentos, que efectúa las calibraciones de los instrumentos y que gestiona los programas y las redes de observación. Las competencias generales se han incluido en la parte V del Volumen I del *Reglamento Técnico* (OMM-Nº 49), y las competencias detalladas se incorporarán en la edición de 2018 de la Guía de la CIMO antes mencionada.

La CIMO y la HMEI

11. Se mantiene la intensa colaboración con los fabricantes de instrumentos a través de la Asociación de la Industria de Equipos Hidrometeorológicos (HMEI). El presidente expresó su agradecimiento a los numerosos expertos de la HMEI que contribuyeron favorablemente a las actividades y reuniones, los talleres de formación y las intercomparaciones de instrumentos de los equipos de expertos de la CIMO.

12. Se elogió especialmente la colaboración con la HMEI en la elaboración de la plantilla de los documentos de especificaciones de licitaciones de las estaciones meteorológicas automáticas. La plantilla fue elaborada inicialmente por la HMEI, con el apoyo del Banco Mundial, antes del examen detallado que realizó el Grupo de Gestión de la CIMO, con la asistencia de un experto en comisión de servicios respaldado por la Oficina de Meteorología de Australia. La plantilla de licitaciones constituye una herramienta valiosa para los Miembros que llevan a cabo procesos de adquisiciones de estaciones meteorológicas automáticas y se encuentra disponible en el sitio web para que los Miembros envíen sus comentarios. Estos comentarios serán fundamentales para determinar la utilidad de la herramienta y decidir cómo mejorarla.

La CIMO y la ISO

13. Se mantiene la fructífera colaboración entre la OMM y la ISO en la elaboración de normas técnicas conjuntas ISO/OMM, que ha dado como resultado la reciente publicación de una norma sobre teledetección en superficie del viento mediante un sistema lidar Doppler heterodino (parte 2, de la serie de lidares de ISO: ISO 28902-2:2017) y la finalización de una norma sobre radares meteorológicos (parte 1, Desempeño y especificación de sistemas: ISO 19926-1). La CIMO ha aceptado contribuir a la elaboración de una nueva norma sobre teledetección en superficie del viento – radar perfilador de viento (norma ISO 23032) y de otra norma sobre teledetección en superficie de parámetros meteorológicos – lidar de retrodispersión de las partículas (norma ISO 28902-4). Asimismo, se continúa colaborando con la ISO en la revisión de otras normas relacionadas con los instrumentos meteorológicos e hidrológicos.

La CIMO, la BIPM y la comunidad de la metrología

14. La colaboración entre la CIMO y la comunidad de la metrología se ha materializado en diferentes niveles. El presidente ha representado a la Comisión en el Consejo de Investigación de EURAMET y en su Grupo Especial sobre Medioambiente. Distintos expertos de la BIPM han participado en varios equipos de expertos de la CIMO y han contribuido de manera muy positiva a su labor y sus resultados. El Laboratorio Nacional de Física de Londres (Reino Unido) organizó una reunión reducida del Equipo Especial sobre Valores de Referencia de la Radiación de la CIMO, en la que participaron representantes de la BIPM, quienes ejercieron una influencia muy positiva en la labor del equipo. Los expertos de la BIPM han solicitado a la OMM, a través de la CIMO, una lista de los temas principales que la OMM desea que la comunidad de la metrología analice, de modo que la comunidad pueda consultarla a la hora de elaborar propuestas y proyectos de investigación, por ejemplo, en el contexto de los proyectos del Programa Europeo de Metrología para la Innovación y la Investigación (EMPIR). En el

marco del proyecto MeteoMet de EURAMET, se han llevado a cabo numerosas actividades que han permitido estrechar considerablemente los vínculos actuales entre los expertos de metrología y meteorología de Europa. Se organizó una comparación entre laboratorios en Europa con la participación de todos los Centros Regionales de Instrumentos de la Asociación Regional VI y numerosos laboratorios de calibración de los SMHN, y los procedimientos creados durante esa comparación actualmente se aplican a otra comparación entre laboratorios en las Asociaciones Regionales II y V.

Experimento de intercomparación de la precipitación sólida

15. El informe final del proyecto Experimento de intercomparación de la precipitación sólida de la OMM (SPICE) se ha publicado recientemente en el marco de la serie de informes sobre instrumentos y métodos de observación. La intercomparación fue sumamente fructífera y no habría sido posible sin la cooperación voluntaria de todos los miembros del equipo y los fabricantes participantes. Se encomió a la Sra. Rodica Nitu por su competente liderazgo como directora del programa SPICE.

Duodécima Comparación Internacional de Pirheliómetros y Segunda Intercomparación Internacional de Pirogeómetros

16. La Duodécima Comparación Internacional de Pirheliómetros se llevó a cabo en el Observatorio Físico-Meteorológico de Davos/Centro Radiométrico Mundial de Davos (Suiza) en 2015, en conjunto con la Segunda Intercomparación Internacional de Pirogeómetros. Las dos intercomparaciones demostraron claramente una mejora importante en lo que respecta a la incertidumbre y la trazabilidad de las mediciones de las radiaciones de onda corta y larga. La excelente ejecución de las dos intercomparaciones y la pronta publicación de los resultados fueron posibles gracias a la labor de todo el personal del Centro Radiométrico Mundial de Davos, bajo la acertada dirección del Sr. Wolfgang Finsterle (Duodécima Comparación Internacional de Pirheliómetros) y el Sr. Julian Groebner (Segunda Intercomparación Internacional de Pirogeómetros).

La estructura de la CIMO

17. La estructura y el mandato de la CIMO se habían modificado considerablemente en la decimoquinta reunión de la Comisión para reflejar las nuevas prioridades de los Miembros y la contribución prevista de la CIMO al WIGOS, mientras que en la decimosexta reunión de la Comisión solo se realizaron pequeños ajustes para subsanar algunas deficiencias y aumentar la eficiencia. En la reunión actual se han propuesto diversos cambios en la estructura con miras a aumentar aún más la eficiencia y, especialmente, preparar mejor a la Comisión para la futura reestructuración de las comisiones técnicas de la OMM, que está previsto que se realice en el Decimoctavo Congreso Meteorológico Mundial, en 2019. La mayor parte de la labor del Grupo de Gestión de la CIMO durante los últimos meses ha estado orientada específicamente a mejorar los mecanismos de trabajo de la Comisión, de modo que esté en condiciones de brindar servicios óptimos a los Miembros de la OMM en el nuevo mundo de los macrodatos y la colaboración entre los sectores público y privado que se avecina.

Observaciones finales

18. Para concluir, el presidente expresó su sincero agradecimiento y reconocimiento a todos los expertos de la CIMO que habían contribuido al amplio abanico de actividades realizadas en el período entre reuniones para garantizar la mejora continua de los sistemas de observación que utilizan los Miembros y la calidad general de las observaciones. Asimismo, comunicó que había finalizado su segundo mandato y que renunciaría a su cargo de presidente de la Comisión. Por último, instó a su sucesor a que continuara respaldando activamente la transición de la CIMO hacia la nueva estructura de gobernanza de la OMM.

_____

World Meteorological Organization
COMMISSION FOR INSTRUMENTS AND METHODS OF OBSERVATION
Seventeenth Session
Amsterdam, The Netherlands, 12 to 16 October 2018

CIMO-17/INF. 2.2(1)
Submitted by:
Secretary-General
12.X.2018

REPORTS BY OPAG CHAIRS AND FOCAL POINTS

OPEN PROGRAMME AREA GROUP ON IN SITU TECHNOLOGIES AND INTERCOMPARISONS

1. Progress and Achievements

1.1 Expert Team on Operational In Situ Technologies (ET-OIST)

General

1.1.1 The focus of this expert team is on the evaluation and development of measurement classifications in view of standardization, and on recommended practices and improvement of guidance material. Based on the ET workplan a large number of tasks were initiated, each with a specific priority. The major tasks are:

(a) Guidelines on combining information from composite observing systems;

(b) Further develop and finalize guidelines on migration from manual to automated observations;

(c) Siting classification (implementation and follow-up);

(d) Sustained performance classification for observing stations on land;

(e) Metadata standards;

(f) Standard for the classification of instruments for rainfall intensity measurements;

(g) Collaborate with ISO TC 180 on review of radiation standards;

(h) Liaise with COST action on snow measurements.

Apart from a number of teleconferences, the expert team met jointly with the Expert Team on Developments in In Situ Technologies (ET-DIST) on 21-23 June 2017. Such a joint meeting had the advantage to mutually cooperate, in particular on items with an overlapping nature.

Guidelines on combining information from composite observing systems

1.1.2 Due to automation and further development of remotely sensed observations (both surface- and satellite-based) there is an increasing interest in combining information from composite observing systems based on very diverse technologies. The integration of in situ raingauge measurements with weather radar data is a good example of such integration. Studies on this topic resulted in a draft Instrument and Observing Methods (IOM) report with the same title, which is expected to be published soon.

Migration from manual to automated observations

1.1.3 The transition of manual to automated observations remains for a long term a big challenge for many Members. Although guidance material is available, and conferences like Technical Conference on Meteorological and Environmental Instruments and Methods of Observation (TECO), the International Conference on Experiences with Automatic Weather Stations (ICEAWS) in the past and the International Conference on Automatic Weather Stations (ICAWS) in 2017 offered the opportunity to exchange experiences. Support on this process to develop

sustainable AWS networks is continuously requested by Members. It is concluded that although the availability of guidance material is sufficient, the lack of knowledge, experience and skillness of personnel (at all levels) is the major bottleneck. Typically, the complexity related to the introduction of new, modern equipment, digital data communication and processing and, network-related data management is underestimated. Moreover, the introduction of automated systems based on AWS networks requires a clear strategy for network and data management, which are outside of CIMO's responsibility. Based on further investigations on the users' critical problems, the development of courses to train NMHS personnel at various levels (management included) and to learn how to establish and operate AWS networks is suggested to be a matter of high priority. This activity should be developed by, for example a task team, preferably in close cooperation with the Commission for Basic Systems (CBS).

Station classification

1.1.4 Two tasks addressed the further development of classification schemes of stations situated on land:

(a) siting classification scheme by variable associated to the exposure of instruments (published in the CIMO Guide, Annex 1.B, Siting Classifications for Surface Observing Stations on Land)

(b) Measurement Quality Classification Scheme (by measurand), to be published.

1.1.5 The introduction of the siting classification scheme by Members is ongoing and has resulted in a number of publications providing experiences with the scheme. Many of those publications are accessible through WMO/CIMO Knowledge-sharing portal. An overview of these experiences could be published as an IOM report. These experiences should result in further improving of this scheme. Important foreseen updates include improvement of the expected measurement uncertainties contributions associated with each class and refinement related to the attitude of a station. For instance, stations located in or near polar regions should be judged differently compared to stations in the middle latitudes or in the tropics.

1.1.6 The scheme for the Measurement Quality Classification is finalized and submitted to CIMO-17 for its approval. In this scheme four classes are defined (indicated by from A to D) and for ten variables, called measurands. The classes in this scheme are associated in the first place to stated target uncertainty budgets. The budget values are associated with resolution and the frequency of calibration, verification and maintenance.

Metadata

1.1.7 Within the WIGOS framework, a WMO metadata standard has been developed and published as a part of the WMO Regularly Material. For this development, CIMO was represented in the Task Team on the WIGOS Metadata. It was noted that elements, relevant to be reported as metadata and associated to the observing practices, as documented in the CIMO Guide, were already published in the Manual on the Global Observing System, and do not need further updates.

Rainfall Intensity Measurements

1.1.8 An action was started to develop a standard for the classification of instruments for rainfall intensity measurements. The initiative came from the hydrological community with support from the Commission for Hydrology (CHy). The measurement of precipitation intensity (apart from precipitation amount) was endorsed years ago, resulting in the formulation of uncertainty requirements and WMO instrument intercomparisons. This measurement is relevant for the nowcasting of flood warnings and the comparisons and validation of precipitation radar data. Nevertheless, the NMHS's are not exchanging precipitation intensity data on a large scale, so there is a limited interest for such a standard. However,

within ISO a development of such a standard is foreseen and cooperation with ISO is relevant to prevent ambiguities with existing WMO guidance material.

Radiations standards, published by ISO

1.1.9 ISO has published five standards on solar energy measurements. For more than 25 years these standards are in force but not updated yet. Recently, however, the ISO Technical Committee on Climate Measurements and data has reviewed and proposed to update ISO 9060:1990, "Solar energy - Specification and classification of instruments for measuring hemispherical solar and direct solar radiation". Members of the Association of Hydro-Meteorological Equipment Industry (HMEI) have suggested to WMO to contact ISO on this development, because the proposed changes might not be in agreement with observing techniques, as recommended by CIMO, or might not be feasible for common observing practices.

Snow measurements

1.1.10 The European Cooperation in Science and Technology (COST) has started an action to design a "European network for a harmonised monitoring of snow for the benefit of climate change scenarios, hydrology and numerical weather prediction" (ESSEM COST Action ES1404). A number of NMHSs participate in this action and WMO has a liaison with this action by the chairman of the ET-OIST.

1.2 Expert Team on Developments in In Situ Technologies (ET-DIST)

General

1.2.1 The ET met via WebEx meetings on a regular basis over the intersessional period to progress most of the items in the work plan.

1.2.2 Several ET members attended the ICAWS-2017 meeting and presented material that has been developed as a part of the group's work plan, in particular on economical AWS.

1.2.3 Collaboration between ET-DIST and ET-OIST has been strong over the intersessional period resulting in two significant joint contribution to the update of the CIMO Guide:

(a) Automatic cloud type and amount observations including new details on the use of sky cameras; and

(b) A significant contribution from ET-DIST members has been made towards the development of the new "MEASUREMENT QUALITY CLASSIFICATIONS FOR SURFACE OBSERVING STATIONS ON LAND", referred to simply as the "measurement quality classification scheme", taking into account the Instrument Performance Monitoring activities of the ET-DIST. The significance of this new classification scheme is that, when used together with the companion siting classification scheme, it enables to define the overall measurement uncertainty, or expanded measurement uncertainty, of ten defined measurands.

Towards calibration of ceilometers, visimeters and present weather sensors and Present weather phenomena sensor output uncertainty definition

1.2.4 The CIMO Guide chapters on ceilometers (Part I, Chapter 15), visimeters (Part I, Chapter 9) and present weather sensors (Part I, Chapter 14) were each reviewed and revised in collaboration with other CIMO expert teams.

1.2.5 Experts noted during the process of contributing to the Present Weather chapter that this chapter needs significant input to bring it up to the overall standard of the other chapters. It is recommended that the Commission request a specific task for the appropriate ET to review the CIMO Guide chapter on Observation of present and past weather; state of the ground in the next intersessional period.

1.2.6 In addition to the CIMO guide update on automatic cloud type and amount observations, preliminary work was started on the background material for an IOM report on automated cloud type identification. This work should be carried forward to the next intersessional period.

1.2.7 Due to a lack of resources, the specific work on definition of present weather phenomena sensor output uncertainty was not able to be performed. This work should be carried forward to the next intersessional period.

Guidance material on detecting volcanic ash and of determining vertical profiles of volcanic ash content more accurately

1.2.8 Due to work loads and likely overlap with the possible Lidar Intercomparison feasibility being performed by ET on instrument Intercomparions (ET-II) this task was not included in the work plan of the ET-DIST. After consideration of the preliminary work performed by the ET-II and the likely longer time-line for any possible intercomparison, it is recommended that this task be re-established for an ET during the next intersessional period.

Development of standard procedures and algorithms to ensure uniformity and traceability of the observational data to SI

1.2.9 An "Instrument Performance Monitoring Survey" was carried out and the draft results of the survey were distributed in 2017. Subsequently the results of the survey were used to produce guidance material for update of the CIMO Guide, and this has been submitted to the CIMO Editorial Board.

1.2.10 Work has progressed for the IOM report on Long-Term Performance of Surface Sensors and will be continued through 2018. To ensure this work continues to a successful completion, the appropriate support needs to be put into place. Therefore it is recommended that this task be carried forward to the next intersessional period.

Guidance material on enabling instruments to be more resilient to extreme or hazardous weather conditions

1.2.11 Good progress was made on guidance material for the design and installation of instruments and measurement infrastructure, to sustain measurements in extreme weather conditions such as in polar and alpine regions. Guidance material for "Extreme Weather" in a new annex to CIMO Guide Chapter 1 of Part I has been drafted and submitted to the CIMO Editorial Board.

Guidance material on measurement of icing conditions and the Investigation on developments on characterization of the surface, snow packs

1.2.12 The task on creating guidance material for Polar Observations was put on indefinite hold for part of the inter-sessional period due to loss of the assigned expert. The team collaborated with the Global Cryosphere Watch team in developing a new chapter on Measurement of Snow. It is recommended that this task be carried forward to the next intersessional period.

Guidance material on use of Economical AWS

1.2.13 A significant review of the state of the technology in the industry has been carried out during the intersessional period. It was noted that new devices were appearing in the market place throughout the four year work program, confirming that this is a technology area of rapid change.

1.2.14 A paper based on the work of the ET was presented at ICAWS-17, namely *Desktop analysis of commercially available "All in One" and "Compact" weather stations- How well can we do it? J Warne*. The paper confirms that there is a wide range of performances across commercially available systems and provides some insights into how to evaluate systems against requirements so that they are "fit for purpose".

1.2.15 Guidance material on Economical AWS, as an annex to Chapter 1 of Part II for the CIMO Guide, has been prepared and submitted to the CIMO Editorial Board.

1.2.16 Given the rapid nature of change in this area it is expected there will be continual developments in the technology and implementation methods for low cost AWS. It is therefore recommended that a task for ongoing review of this topic be carried forward to the next intersessional period.

Guidance material on the Implementation of Environmentally Friendly Radiosondes

1.2.17 Extensive research and investigation was undertaken into what innovations have been made in this field over the previous five years and it was identified that unfortunately only minimal progress has been made.

1.2.18 The ET therefore changed focus from reporting on progress that had been made, towards producing guidance material on environmentally friendly practices for users, and suggestions to manufacturers to help stimulate progress in the manufacture of environmentally friendly radiosondes.

1.2.19 Guidance material on the environmentally friendly practices for the use of radiosondes, and towards potential manufacturing improvements towards producing environmentally friendly radiosondes, have been submitted to the CIMO Editorial Board, to be included as an annex in the CIMO Guide, Part I, Chapter 12.

Guidance material on the measurement of soil moisture

1.2.20 A survey of national practices with respect to Soil Moisture was conducted and the results reviewed.

1.2.21 Due to a lack of resources in the ET and other higher priority work, the survey results were not able to be progressed into the development of standards on soil moisture measurement for global soil moisture measurements, in support of the International Soil Moisture Network (ISMN). It is recommended that this task be re-established during the next intersessional period.

1.3 Expert Team on Instrument Intercomparisons (ET-II)

General

1.3.1 Over the intersessional period the ET met via WebEx meetings on a regular basis, and had two face-to-face opportunity meetings (while attending other planned events). There was initial enthusiasm in the tasks. The resignation and inability to replace several ET members later in the intersessional period reduced the core ET to only four members including the chairperson, and this significantly inhibited the ability to complete several of the ET tasks.

SPICE Final Report

1.3.2 Publication of the final SPICE Report on the WMO website is expected around the time of the CIMO-17 session, October 2018. It is expected that the report will include input that will be used for the review of the Siting Classification Scheme and the Measurement Performance Classification Scheme under the topic of measurement of Solid Precipitation and Snow on Ground, the provision of quality controlled and documented datasets to the community, and CIMO Guide updates covering the following topics:

(a) Precipitation measurement;

(b) Operational use of automatic instruments, including technical specification recommendations; and

(c) Measurement of snow (linked with the development of the GCW best practice guide).

1.3.3 It is recommended that the task for production of CIMO Guide updates and guidance material resulting from SPICE be carried over to the next intersessional period.

Potential Future Intercomparison of ceilometers and lidars for the detection of Aerosols and Volcanic Ash

1.3.4 The Task Team has been preparing a project feasibility study and the report is waiting on the outcome of discussions between experts about the role of dust in detecting ash to finalize the report. It is recommended that the significant work performed on this task be carried forward to the next intersessional period for completion.

1.3.5 Experts from Japan have signalled a potential location, Kagoshima, to perform an intercomparison. It is recommended that this offer be followed up by the relevant expert team in the next intersessional period.

1.3.6 It has been identified the DWD Lindenberg are performing an Ceilometer Performance Experiment. It is recommended that the ET enter discussions with DWD to discover if the DWD experiments may be expanded to assist with the Intercomparison of ceilometer and lidar for the detection of Aerosols and Volcanic Ash.

Recommendation for the two most likely international intercomparisons and feasibility reports for those two intercomparisons, demonstrating their expected impact on consistency of observations

1.3.7 Refer to the previous paragraphs for the item "Intercomparison of ceilometers and lidars for the detection of Aerosols and Volcanic Ash". It is recommended that the proposal for this intercomparison be discussed at CIMO-17.

1.3.8 Feasibility Study WMO-CIMO Upper-Air Instrument Intercomparison. The previous feasibility study was reviewed and the subsequently re-reviewed by a new project leader, and a report prepared, see "WMO-CIMO Upper-Air Instrument Intercomparison TT-UAII Report to WMO-CIMO". The report concluded that there were compelling reasons to perform and Upper-Air Instrument Intercomparison, together with a need to include more manufacturers; there are new radiosonde models since the last intercomparison in 2010; Essential Climate Variables (ECV) need to be considered; and remote sensing techniques should be included. There is a tentative plan in place by DWD, using the Lead Centre Lindenberg facility, to perform the project in 2021. It is recommended that the feasibility study "WMO-CIMO Upper-Air Instrument Intercomparison TT-UAII Report to WMO-CIMO" be discussed at CIMO-17.

1.3.9 One new potential future intercomparison has been identified and a feasibility study independently prepared and presented to the ET, namely: "Feasibility Study of an Intercomparison of Thermometers and Radiation Shields". It is recommended that the proposal for this intercomparison be discussed at CIMO-17.

1.3.10 A proposal has been identified, with expressions of interest from ET-OIST, Lead Centre Italy, NCAR USA and RIC Japan, for the intercomparison of "dual purpose"[1] non-catchment type instruments for solid and liquid precipitation measurement (remote-sensing/new technologies for both precipitation and visibility/present weather measurements for AWS). It is recommended that the proposal for this intercomparison be discussed at CIMO-17.

Liaison with other ETs, RAs and communities (BSRN, GAW, WCRP, etc.) on results of and intentions for intercomparisons

1.3.11 There have been no results, papers or outcomes from the national China solid precipitation intercomparison supplied to the ET for review. It is recommended that this task be carried over to the next intersessional period.

1.3.12 WMO Radiation Intercomparisons: The 4th WMO Regional Pyrheliometer Comparison (RPC) of RA II, jointly held with RA V, had been reviewed and an IOM report is published. It has been identified that the mechanism of regular IPCs is a key element for traceability and homogeneity of radiation measurements around the world, however the frequency of such events may be inadequate. It is recommended that the Commission request a task be included for the future ET to review the adequacy of the current program and if necessary propose a new mechanism and/or intervals.

1.3.13 The previous list of potential International Instrument Intercomparisons recorded at CIMO-16 (WMO n. 1138, Annex II), has been reviewed, categorized and prioritized, and is presented in Annex 1. It is suggested that this table is reviewed at CIMO-17. It is further recommended that during the next intersessional period a survey is carried out with the objective of creating an updated table (with web links and contact points) of planned/started/concluded/ongoing instrument intercomparisons, and that this list be presented on the WMO/IMOP website.

1.3.14 There is no CIMO Guide updates resulting from the work of ET-II.

1.4 Expert Team on Aircraft-Based Observations (ET-AO)

General

1.4.1 Much of the work of this expert team has been of an ongoing nature and based on a workplan with quite a large number of tasks and activities, primarily aimed at the development of new or improved documentation and also the implementation of new or improved on-board AMDAR software in support of the Aircraft Meteorological Data Relay (AMDAR) programme. In addition to activities related to these matters, the team has also coordinated or undertaken activities on:

- data quality improvements, for example by investigating temperature biases;
- validation and implementation of water vapour and liquid content measurements;
- establishment of standards and implementation of turbulence measurements;
- investigating new or improvements to existing communication technologies;
- maintaining the AMDAR On-board Software Functional Requirements Specification (AOSFRS, IOM Report No. 115);
- assessment of new upper air observing technologies such as with unmanned aerial vehicles (UAV).

---

[1] **Dual purpose** means that "Non-catching type solid/liquid precipitation instruments" and "visibility/present weather sensors" generally coincide in many cases or all, in other words they have the same measurement principle. So it can be used as a two-in-one international intercomparison of significant importance for "precipitation measurement" sector and new technologies implemented in AWS.

1.4.2 The expert team works closely with the CBS expert team on Aircraft-Based Observing systems (ET-ABO). Both expert teams were established in order to continue and develop the work of the previous WMO AMDAR Panel, which ceased activities in 2012. Although the activities of both expert teams are very well coordinated and harmonized to avoid duplication of effort, the members of both teams have recommended that the amalgamation of the two teams into a single inter-programme expert team (IPET) should be considered by the management groups of CIMO and CBS. It is expected that this amalgamation would result in a more efficient program while maintaining the high level of output that has been achieved over the past six years. Both CBS and CIMO management groups agreed that this was also in line with the foreseen restructuring of WMO. This agreement resulted in a decision by EC-70 (Decision 37 (EC-70), Inter-programme Expert Team on Aircraft-based Observing Systems) to form the IPET-ABO, governed by CBS in collaboration with CIMO.

Quality evaluation, investigating of temperature biases

1.4.3 Air temperature bias in the AMDAR observing system has been an ongoing concern of the programme and data users for many years. Key findings, outcomes and recommendations are to be published in a paper titled, *AMDAR Temperature Bias and the Exploitation of Mode-S EHS Registers*. The signature of the temperature bias from AMDAR observations was being investigated and characterized, by assuming that the observed total bias consists of a flight phase depending part, a Mach number related part, and a constant part. It is expected that a final report will be published as an IOM report before the end of 2018.

Water Vapour Measurement (WVM)

1.4.4 Presently 148 aircraft (USA: 139, Europe: 9) of the worldwide AMDAR fleets had been equipped with the Water Vapour Sensing System (WVSS-II), which is based on a laser absorption, air-sampling method. Quality control results have shown that humidity derived from WVSS-II is of very high quality, with biases measured with reference to the first guess fields of numerical models to be consistently in the range of a few per cent of relative humidity, only. That means that these measurements, observed by aircraft up to an altitude of about 12 km (with mixing ratios down to around 0.05 g/m^3) demonstrate an uncertainty equal to or better than in radiosonde measurements. These sensors have demonstrated a long record of stable and reliable operation for many years now, with very little need for operational intervention, replacement or recalibration. In addition to these AMDAR WVSS-II-equipped aircraft, about 400 aircraft worldwide had been equipped with the Panasonic Avionics Corporation (PAC), Tropospheric Airborne Meteorological Data Reporting (TAMDAR), which uses capacitive sensors to measure and report relative humidity. This system sends its data directly via a satellite connection to the central data management hub of Panasonic, from which, subject to a contractual arrangement with a partner, NMHSs can receive these and other meteorological data for national applications exclusively.

1.4.5 A strategy for an AMDAR and WVSS-II intercomparison had been established, with a study providing the outcomes of the data analysis expected to be available before the end of 2018.

1.4.6 A draft version of an IOM report with a complete history of the testing and validation of the WVSS-II system for use as a component of an AMDAR observing system had been finalized. It is expected to be published as an IOM report in the 4th quarter of 2018.

Turbulence

1.4.7 Unexpected turbulence encounters are a leading source of occupant injuries. Turbulence is often invisible to both pilots and remote sensing devices (for example radar), therefore in situ aircraft observations will help to reduce turbulence impacts. There are now three known versions of operational in situ turbulence reporting algorithms, which report eddy dissipation rate (EDR). Technically, EDR (defined as the cube root of the eddy dissipation rate) is generally reported and has been adopted as the aviation standard or preferred measurement by both International Civil Aviation Organisation (ICAO) and WMO. The team had developed and incorporated the “EDR Implementation Plan” within the wider "Aircraft-Based Observations Programme Strategy and Implementation Plan”, which will result in further actions for a successful implementation of EDR reporting.

Developments with AMDAR Software

1.4.8 The coordination of the development of AMDAR On-board Software (AOS) is an ongoing task to interact with commercial avionics developers towards a more standardised approach to AOS availability. Such development should be based on the AOS Functional Requirements Specification (IOM Report-No. 115). The approach to progress this task had been initially envisaged through the concept of the approach to avionics vendors to recommend the development of “generic AOS modules” through the hosting of an Avionics Vendors Conference, but, as a result of other activities being prioritized, including the unanticipated development of the WMO-IATA Collaborative AMDAR Programme (WICAP), this activity has not yet been completed. The new collaboration with the International Air Transport Association (IATA) potentially offers an alternative approach to this task by seeking to involve IATA in the approach to avionics vendors and developers, which requires the development of an appropriate strategy.

1.4.9 A database of known AOS implementations by WMO Members has been compiled and is available via the WMO/AMDAR website. This metadata will eventually become a part of the Aircraft-Based Observing System metadata repository within OSCAR/Surface. Guidance on AOS development is also available in Guide to Aircraft-Based Observations (WMO-No. 1200).

Regulatory Material

1.4.10 Guidance material on Aircraft Based Observations is available in the new Guide to Aircraft-Based Observations (WMO-No. 1200). This Guide refers to the CIMO Guide (WMO-No. 8, Part II, Chapter III, Aircraft-Based Observations) explaining the measurement technologies used by aircraft. The expert team has reviewed this chapter and provided an update, to be published in the next edition of the CIMO Guide.

Unmanned Aerial Vehicles (UAV)

1.4.11 The team has investigated the rapid and ongoing development of UAV and “drone” technologies and the potential opportunities to employ such technology to operationally observe meteorological variables. It was found that advances have been made with regard to UAV developments to host meteorological payloads, the integration of UAVs into shared airspace and the wider promotion of societal and environmental benefits of the use of UAVs, for example emergency services. A continued expansion of the use of UAVs and therefore the opportunities for meteorological data provision via such platforms was expected to continue to increase, particularly if appropriate partners with similar interest and a suitable business case could be identified. Aspects like airspace management, safety and data policy and partnerships with manufacturers and operators are considered crucial factors for future success in this regard. It is concluded that UAVs could be expected to play a greater role in the provision of upper-air meteorological observations in the future. Additionally, while there was potential for NMHSs to

implement such systems as a component of their operational observing systems, there was also potential to partner with other communities and operators not necessarily associated with meteorology to derive observations, including the concept of “crowd sourcing”. It is proposed to undertake a workshop and/or pilot project on UAV systems in 2019 and to consider their participation in the upcoming CIMO upper-air inter-comparison.

1.5 Task Team on Radiation References (TT-RadRef)

General

1.5.1 Over the current CIMO inter-sessional period there has only been one special meeting of the Task Team, and a number of ad hoc meetings (for example, during the International Pyrheliometer Comparison (IPC), in 2015). Given the nature of the workplan where comparisons or investigations by individuals were required or some work was dependent on other outcomes, face-to-face meetings of the whole Task Team were not considered practical. However, a special meeting was held at the National Physical Laboratory, UK, in November 2017 and focused on terrestrial radiation traceability with attendance limited to a majority of Task Team members and external experts from National Oceanic and Atmospheric Administration (NOAA), National Renewable Energy Laboratory (NREL) and the Swiss Federal Institute of Metrology. The other ad hoc meetings occurred when members of the TT were at the same location.

1.5.2 All the elements of the workplan that have few dependencies on other activities in the work plan have been successfully completed. Where there are key dependencies, specifically the confirmation of a specific change in traceability to the International System of Units (SI) for the World Radiometric Reference (WRR) and World Infrared Standard Group (WISG), no action has been taken as magnitudes and uncertainties have yet to be finalized.

WRR SI relationship

1.5.3 There has been considerable work at Physikalish-Meteorologisches Observatorium Davos – World Radiation Centre (PMOD/WRC) related to the WRR-SI relationship, including the continuing development of the cryogenic radiometer to enhance its ability to be used in pyrheliometer comparisons. However, the issue of determining the transmission of the optical windows that preserve vacuum within the cryogenic radiometer is still problematic, and the PMOD/WRC cryogenic radiometer is still unique. That said, the PMOD/WRC in collaboration with other national metrology laboratories are converging on a difference value between the WRR and SI units of irradiance and should be available in the next intersessional period.

Implementation after EC approved scale changes

1.5.4 Through PMOD and the Global Climate Observing System (GCOS) Baseline Surface Radiation Network (BSRN), investigations on the impact of scale changes for both solar and terrestrial (longwave) radiation to radiation databases have concluded that implementation could be achieved for the GCOS solar and terrestrial database. The changes for the solar components are a straight forward percentage change for those databases like the GCOS database where the resolution of the quantity stored is better than three significant figures. However, for terrestrial irradiance the problem is complicated by the traceability chain to the WISG, and the particular transfer equation used by national centres for their instrumentation. As a result, while possible transfer of terrestrial measurements to any revised scale is possible, the traceability chain is significantly more complex than for solar measurements.

Special TT meeting on traceability of terrestrial radiation measurements

1.5.5 The special meeting on traceability of terrestrial radiation measurements highlighted a number of issues and suggested activities to resolve them; the report of the meeting is being finalized and should be available in 2018. The meeting was very successful by bringing together representatives of the GCOS measurement community (BSRN), PMOD, the developer of an absolute terrestrial radiometer (NREL) and radiation experts from national metrology institutions. The meeting noted the significant progress in terrestrial radiation measurements since the 1990s under the influence of PMOD and BSRN, and the stability of the WISG since its adoption as an interim terrestrial radiation reference.

1.5.6 Through the work of the field experiments of the TT in Japan and Australia and its collaboration with an intercomparison sponsored by BSRN in the USA, the results are supporting the PMOD evidence of a 4-5 Wm^{-2} offset between the instruments of the WISG that use filtered domes, and new window-less instruments.

1.5.7 Recent work published by the CIMO Testbed in Izania also demonstrated the same difference between complex radiative transfer models and instruments calibrated to WISG.

1.5.8 As a result of the compelling evidence of a 4-5 Wm^{-2} offset in moderate atmospheric water vapour concentrations, the special meeting recommended increasing the nominal 95 % uncertainty of field measurements promoted by CIMO and BSRN from 5 Wm^{-2} to 10 Wm^{-2}.

1.5.9 The special meeting of the TT also made detailed examinations of the current traceability chain to the WISG, and the potential to establish a replacement of the WISG using blackbodies and absolute instruments. The outcome was that while there was significant potential in these new instruments and methods, more work needs to be done over the next 3-5 years to ensure a stable and maintainable terrestrial reference can be developed to replace the WISG before any recommendations are made to CIMO or the WMO Executive Council (EC).

Future responsibility for solar and terrestrial (longwave) references

1.5.10 Future responsibility for solar and longwave references was examined earlier in the intersessional period and it was determined that WMO sponsored intercomparisons like the IPC and coincident comparisons for spectral and terrestrial radiometers remain the most effective mechanism to promote traceability in solar and terrestrial radiation measurements. This was further confirmed for traceability of terrestrial radiation measurements during the special meeting of the TT.

1.5.11 The TT was asked to advise WMO if other international and/or national agencies should be responsible and accountable for radiation references. During the intersession period the evidence was quite clear that given the specialized nature of solar and terrestrial radiometry, the WMO and its World Radiation Centre remains the most effective organizations to be accountable for solar and terrestrial references. This was supported by the national metrology specialists that attended the special meeting of the TT.

WISG Governance

1.5.12 When the WISG was established as an interim terrestrial radiation standard by CIMO, PMOD/WRC was given responsibility and authority for the WISG. As the WISG, an interim reference, has now been in operation for over a decade and the instruments are used continuously and may fail or need to be replaced to resolve the offset issue instituting a governance structure similar to the WRR was recommended (see CIMO/DOC 2.3(1), and Annex 2) at the special meeting of the TT so that the authority rested with WMO under guidance from CIMO.

Importance of BSRN Metadata

1.5.13 In the development of the agenda for the special TT meeting it became clear that a significant amount of metadata related to terrestrial radiation measurements and decision processes within BSRN appear to be unavailable as a result of the transition of the GCOS data base from Eidhgenössiche Technische Hochschule (ETH) Zürich, Switzerland to the Alfred Wegner Institute (AWI) Bremerhaven, Germany. These documents need to be recovered if possible and made accessible

1.5.14 As CIMO has a significant role in the WIGOS measurement community and the measurement foundations of GCOS, and as at the seventieth session of the WMO Executive Council a new WMO organization structure were proposed, there should be an CIMO-type activity to ensure:

(a) the past and future BSRN metadata are accessible after organizational changes, and

(b) the BSRN quality requirements for station and data validity continue conform to GCOS principles.

Future activities

1.5.15 The need for a specialist group on Radiation Standards have been proven over the intersessional period and as a result the suggested activities for a TT or equivalent have been proposed in CIMO-17/DOC 4.2(1).

_____

Annexes: 2

ANNEX 1

Potential Future Intercomparisons

Highest priority	CIMO-16 Priority	Proponent	Comments
WMO Radiosonde performance intercomparison (ET-A3-II Workplan Task 6 – WMO Upper Air and remote sensing instrument intercomparison)	2	CIMO Switzerland Germany (?)	(?) scheduled in 2021[2]. Preferably on regular base in future (5/7 years)
WMO Vertical Aerosol and volcanic ash concentration by optical remote-sensing intercomparison (ET-A3-II Workplan Task 7)	3	CIMO France	Scientific Reference Document (end of March 2018)
Of Interest - CIMO to Initiate?			
WMO Intercomparison of Thermometers and Radiation Shields	new	Meteomet BIPC/CCT ET-A3-II	Proposal during CIMO-17
WMO Intercomparison of non-catchment type instruments for solid and liquid precipitation measurement (remote-sensing/new technologies)	new	ET-OIST LeadCentre Italy NCAR USA RIC Japan	Dual purpose: follow-up of SPICE and comparison of visibility and present weather sensors (optical) for AWS.
Of Interest - Being performed by other organizations			
Ceilometer Performance Experiment at Lindenberg	new	DWD	Ongoing
Inter-lab comparison pressure- humidity-temperature, cooperation with (RA VI) RIC Slovenia and RIC Philippines Wind tunnels/anemometer Precipitation gauges	new	RIC Japan	All planned, link available3
AWS comparisons for pressure, temperature, humidity, wind	new	RIC Argentina	?
Brewer Spectrophotometers intercomparison for Central Europe Region (Hungary, Slovakia, Poland) in Ganovce Radiation shields for weather sensors at national level in Bratislava-Keliba	new	RIC Slovakia	Planned 2019 Planned 2018-2020
Reference thermometers and reference barometers at national level (National Centre Metrology)	new	RIC China	Planned

[2] An international radiosonde intercomparison is scheduled at Lindenberg for the year 2021. https://www.gruan.org/gruan/editor/documents/meetings/icm-9/pres/pres_0713_Dirksen_WMOCampaign2019.pdf

[3] http://www.wmo.int/pages/prog/www/IMOP/meetings/ET-OpMet_2/CIMO_ET-OpMet-2-Doc_5.3(2)_Status%20and%20plans%20for%20interlaboratory%20comparisons%20in%20WMO%20RA%20II%20and%20V.docx

Regularly scheduled (to be separated into a new list)			
WMO International Pyrheliometer Intercomparison (IPCs)	1	CIMO ET-A3-II	Every 5 years
WMO International Pyrgeometer Comparisons (IPyCs)	?	CIMO ET-A3-II	In conjunction with IPCs
WMO Regional Pyrheliometer Comparisons (RPCs)	7	CIMO RAs	Multi-regional, not international Every 2/3 years
WMO Regional intercomparison of reference pyranometers of the WMO RA VI Members (global irradiance)	5	RA VI	In conjunction with RPCs.
Ongoing (to be separated into a new list)			
WMO SPICE[4]	6		Final Report in October 2018
Completed			
WMO High Quality Radiosonde Regional Intercomparison, Region II, China	14		It may be deleted from list
Lowest priority or no priority (To be removed?)			
Surface aerosol concentration intercomparison	4		Is CIMO pertinent?
WMO combined intercomparison of thermometer screens/shields in conjunction with humidity-measuring instruments in Artic Region	8	Canada (2008)	To be included in "*Intercomparison of Thermometers and Radiation Shields*"
WMO intercomparison of Present Weather Sensors in Tropical conditions	9		To be included in a general campaign of PW sensors in various climatic regions
WMO Pilot Intercomparison of sea-level and Tsunami Monitoring Instruments	10		Is CIMO pertinent?
WMO Intercomparison of Hydrological gauges to cover both normal conditions and extreme events	11		Is CIMO pertinent?
WMO Intercomparison of Ceilometers in support of the ET on Upper Air Systems Intercomparisons	12		To be re-formulated of possibly included in n. 2 or n.3. See an on-going national experiment[5]
WMO Combined Intercomparison of pyranometers, sunshine duration instruments, UV sensors	13	Former ET-II Italy RIC China	To be possibly combined with n.5 and organized on regular base Similar completed intercomparison comparisons[6] Preferably under WMO RRCs

[4] WMO Intercomparison on Solid Precipitation including Snowfall and Snow Depth Measurements in various regions of the world (multi-site experiment) at Automatic Stations.

[5] https://ceilinex2015.de/. See Task 3

[6] An intercomparison was performed in Payerne (BSRN station) to assess the performance of Radiation Sensors for the Solar Energy Sector (4. Vuilleumier, L., C. Félix, F. Vignola, P. Blanc, J. Badosa, A. Kazantzidis, and B. Calpini (2017). Performance Evaluation of Radiation Sensors for the Solar Energy Sector, on-line pre-publication, Meteorol. Z.)

Weather radar workshops to examine differences on signal and data processing using common signal data set	15		The International Intercomparison RQQI[7] (weather radar) certainly supersedes this. It can be deleted.
WMO International Evaluation of AMDAR Water Vapour Sensor	16		No feedbacks from ET-II survey
WMO Evaluation of wind profiler wind measurement quality and quality control	17		To be included in n.2 (WMO UA&remote-sensing II)
WMO International Test-bed Experiments and Pilot Studies for integrated in-situ remote-sensing upper-air networks (including tropical and subtropical tests)	18		To be clarified. There is a task in ET-OIST linked with the integration of observing technologies for precipitation measurement (Japan to lead)[8]
WMO Intercomparison of automatic radiosonde launching systems to be hosted and organized by Denmark in Greenland	19		Not sure an intercomparison of (co-located) automatic launcher is really needed (and feasible).
Regional radiosonde intercomparison to be hosted and organized by India	20	India	Regional, not international. Old proposal, under tasks of former ET-II. No more applicable, <u>it may be deleted from list</u>

_____

[7] The International Radar Quality control and Quantitative precipitation estimation Intercomparison (**RQQI**) was officially launched in April 2011 in Exeter, UK by the established International Organizing Committee (project leader Paul Joe, Environmental Canada), link: https://www.wmo.int/pages/prog/www/IMOP/reports/2011/IOC-RQQI-1_Final_Report.pdf.

See also CIMO-16 sec. 5.4/5.5 and ET-ORST workplan https://www.wmo.int/pages/prog/www/CIMO/WorkingStructure/WorkPlans/CIMO-16/B1_Workplan_ET-ORST.docx

[8] https://www.wmo.int/pages/prog/www/CIMO/WorkingStructure/WorkPlans/CIMO-16/B1_Workplan_ET-ORST.docx

ANNEX 2

Governance Framework for the operation and maintenance of the
World Infrared Standard Group of Pyrgeometers (WISG)
Julian Gröbner
Ver. 4.0, 10 August 2018

Introduction

The Infrared Radiometry Section of the World Radiation Centre (WRC-IRS) was established on the recommendation made at the 13th session of the Commission for Instruments and Methods of Observation, WMO –No. 947 (CIMO-XIII_Final_Report):

RECOMMENDATION 1 (CIMO-XIII)

ESTABLISHMENT OF A WORLD INFRARED RADIOMETER CALIBRATION CENTRE

THE COMMISSION FOR INSTRUMENTS AND METHODS OF OBSERVATION,

NOTING:

(1) That WMO is developing standards in the form of recommendations for application by users,

(2) That bodies/programmes within and external to WMO, such as the Global Atmosphere Watch, the Baseline Surface Radiation Network, and the United States Surface Radiation Network (SURFRAD), are increasingly dealing with long-wave radiation-related measurements,

(3) The efforts of MétéoSwiss to establish a Calibration Centre for Infrared Radiometers at the Physikalisch-Meteorologisches Observatorium Davos (PMOD) in Davos, Switzerland,

CONSIDERING the proposal of the Secretary-General of WMO, based on the recommendation of the Expert Group of the Executive Council/Working Group of the Commission for Atmospheric Sciences to establish a calibration centre for infrared (IR) radiation at the PMOD in Davos, Switzerland,

WELCOMING the positive response from Switzerland to that proposal of the Secretary-General of WMO,

RECOMMENDS that a World Infrared Radiometer Calibration Centre consonant with guidelines given in the annex to this Recommendation be established at PMOD in Davos, Switzerland;

AGREES to provide technical/scientific guidance in the establishment and continuing quality assurance of such a centre.

ANNEX TO RECOMMENDATION 1 (CIMO-XIII)

GUIDELINES FOR A WORLD INFRARED RADIOMETER CALIBRATION CENTRE

1. The World Infrared Radiometer Calibration Centre should serve as a centre for the international calibration of meteorological instruments measuring infrared (IR) radiation and maintaining the standard instruments for this purpose.

2. The calibration results should be disseminated in a hierarchical manner, through Regional Radiation Centres to National Radiation Centres and then to other government laboratories and private sector laboratories.

3. The World Infrared Radiometer Calibration Centre should fulfil the following requirements:

(*a*) It should establish and maintain a group of at least three of the most stable pyrgeometers from different manufacturers, which are periodically calibrated with instruments capable of measuring the IR radiation on an absolute level;

(*b*) It should take all steps necessary to ensure at all times the highest possible quality of its standards, testing equipment and procedures;

(*c*) It should serve as a centre for the calibration of pyrgeometers from Regional Radiation Centres;

(*d*) It should have the necessary laboratory facilities, in particular a blackbody radiation source for the (temperature) characterization of the instruments, and outdoor facilities for the simultaneous comparisons of instruments;

(*e*) It should follow closely or initiate developments leading to improved standards and/or methods in meteorological IR radiometry;

(*f*) It should organize expert meetings to discuss and disseminate reports on progress and issues concerning the measurements and calibration of instruments used in observing meteorological long-wave radiation.

Based on recommendation 7, made at the 14th session of CIMO (CIMO-XIV_Final_Report), the World Infrared Standard Group of Pyrgeometers (WISG) was established, which serves as reference standard for the calibration of pyrgeometers measuring downwelling atmospheric longwave irradiance.

Recommendation 7 (CIMO-XIV)

WRC INFRARED RADIOMETRY SECTION

THE COMMISSION FOR INSTRUMENTS AND METHODS OF OBSERVATION,

Noting the crucial need for measuring infrared radiation at the highest level of quality possible,

Considering that:

(1) Following Recommendation 1 (CIMO-XIII) — Establishment of a World Infrared Radiometer Calibration Centre, the PMOD/WRC had established within the World Radiation Centre the Infrared Radiometry Section (WRC-IRS), in January 2004, to fulfil Recommendation 1 (CIMO-XIII),

(2) WRC-IRS is crucial to worldwide quality and compatibility of infrared data,

(3) There remains a need to develop additional infrastructure and to establish operational procedures for the WRC-IRS,

Recommends that:

(1) The WRC-IRS establishes an Interim WMO Pyrgeometer Infrared Reference using the procedures and instrumentation that make up the World Infrared Standard Group;

(2) The members of CIMO and instrument manufacturers be encouraged to collaborate in the development of instruments and methods for improving traceability of infrared (3 – 50µm) irradiance measurements to SI units;

(3) Every three years Regional Radiation Centres supporting networks measuring Infrared (3 – 50µm) irradiance shall submit their pyrgeometers to the WRC-IRS for comparison, to ensure that networks run by NMHSs are compatible.

The stability of the WISG is monitored continuously by intercomparing the four pyrgeometers comprising the WISG. The long-term stability of the WISG is verified annually by monitoring the sensitivity of the pyrgeometers in the reference blackbody of WRC-IRS (Gröbner, 2008). Periodically, pyrgeometers sent for calibration are used to verify the long-term consistency between these pyrgeometers and the WISG by comparing the calibrations to previous calibrations. In some cases, these calibrations date back to the original campaign in 1999.

Regular intercomparisons between the WISG and the Infrared Integrating Sphere Radiometers (IRIS) that are traceable to the reference blackbody of the WRC-IRS have been performed since 2008. These comparisons are performed during clear nights and serve as a methodology for establishing traceability of atmospheric longwave irradiance measurements of the WISG to SI through the WRS-IRC reference blackbody.

In 2010 and 2015, an International Pyrgeometer Comparison (IPgC) was held jointly with the International Comparison of Pyrheliometers (IPC) (Gröbner and Thomann, 2018).

The World Infrared Standard Group of Pyrgeometers (WISG)

The WISG is made up of the following instruments:

(a) Eppley PIR 31463F3

(b) Eppley PIR 31464F3

(c) Kipp&Zonen CG4 FT004

(d) Kipp&Zonen CG4 010535

Figure 1 shows the variability of the irradiance measured by the WISG pyrgeometers relative to their average over the time period 2004 to the end of 2017. These measurements confirm the stability of the WISG to within ±1 Wm^{-2} since its inception in September 2003.

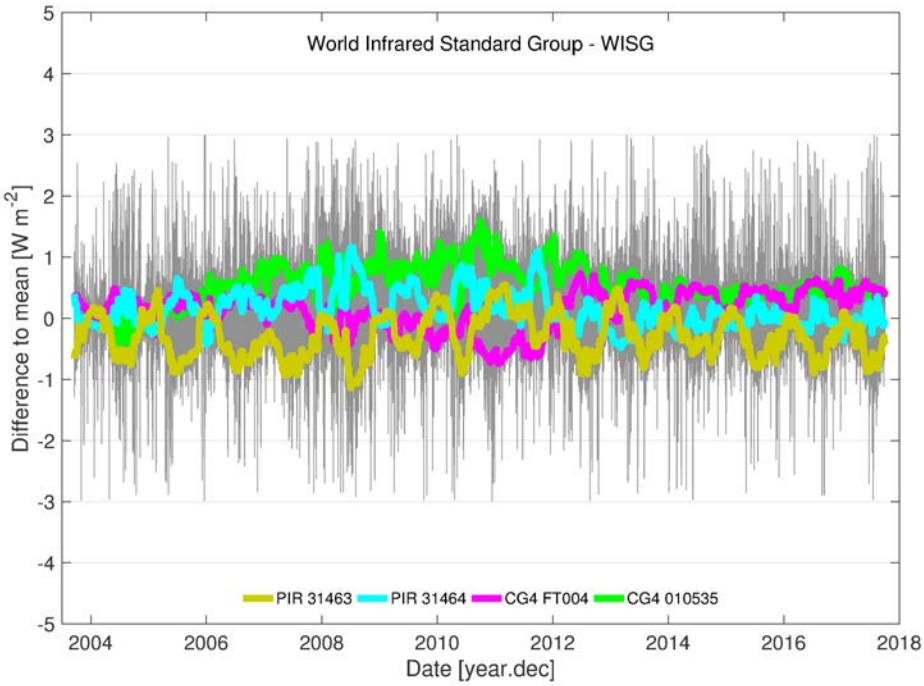

Figure 1 Night time atmospheric longwave measurements of the WISG pyrgeometers relative to their average. The coloured lines represent a 30 day running mean of each WISG pyrgeometer, while the grey shaded area represent the daily means of night time measurements.

The WISG coefficients in use are listed in Table 1 for the four pyrgeometers comprising the WISG. The equation used to convert the raw signals of each pyrgeometer to longwave irradiance E in Wm^{-2} is the following:

$$E = \frac{U}{C}\left(1 + k_1 \sigma T_B^3\right) + k_2 \sigma T_B^4 - k_3 \sigma \left(T_D^4 - T_B^4\right),$$

where C is the responsivity, U the signal of the thermopile in Volt, T_B the body temperature in Kelvin, T_d the dome temperature in Kelvin (if available), and k_1, k_2, k_3 instrument parameters. The WISG coefficients were updated on 1st January 2006 to base them on the then most recent characterisations performed in the reference blackbody of WRC-IRS. While the coefficients k_1, k_2, and k_3 were determined in the blackbody, the responsivity C was retrieved for each WISG pyrgeometer by a comparison to the remaining three WISG radiometers using their original coefficients for the period 1st October 2004 to 1st April 2005. A second update of the WISG pyrgeometer CG4 010535 was done on 1st January 2012, as stated in the PMOD/WRC annual report of 2011. The WISG radiometer CG4 010535 required an internal recalibration due the observed drift of 0.14 $Wm^{-2}yr^{-1}$ over the previous years. The first step in the recalibration process was to determine the pyrgeometer coefficients k_1 and k_2 using the reference blackbody of WRC-IRS. Subsequently, the responsivity C of CG4 010535 was determined from the remaining three WISG radiometers using the new coefficients; the night time data from the whole of the year 2011 was used for that purpose. The resulting change in the average WISG irradiance is -0.18 Wm^{-2}, while the overall variability between the WISG radiometers decreased from 0.85 Wm^{-2} with the original calibration to 0.62 Wm^{-2} using the newly recalibrated CG4 010535. The updated WISG coefficients were implemented as of 1st January 2012.

Table 1 Instrument parameters in use by the WISG pyrgeometers.

Instrument	C / µV/Wm^2	k_1	k_2	k_3	in use since
PIR 31463F3	3.780	0.0766	0.9974	3.39	3 Sep 2003-31 Dec 2005
	3.534	0	0.9943	3.27	1 Jan 2006
PIR 31464F3	4.060	0.0599	0.9950	2.87	3 Sep 2003-31 Dec 2005
	3.585	-0.0511	0.9945	2.84	1 Jan 2006
CG4 FT004	12.6	0	1	1	3 Sep 2003-31 Dec 2005
	12.32	-0.041	0.9978	0	1 Jan 2006
CG4 010535	9.7	0	1	1	1 Jun 2004-31 Dec 2005
	9.59	-0.034	0.9980	0	1 Jan 2006-31 Dec 2011
	9.52	-0.03	0.9980	0	1 Jan 2012

WISG Maintenance

The WISG radiometers are mounted on a solar tracker and shaded from the direct solar irradiance. They are mounted in ventilation units designed by PMOD/WRC (VHS) with a slightly heated airflow. The following tasks are performed routinely:

Daily (normal working days only)

(a) Instrument domes are visually checked and cleaned if necessary. The correct functioning of the ventilation units (heated airflow) is verified.

(b) The pointing of the tracker is verified if the sun is shining, and the correct positioning of the shading disks.

Monthly

The sillicagel is checked and changed if necessary.

Annually

The WISG pyrgeometers are characterised in the WRS-IRC reference blackbody to retrieve the instrument parameters k_1, k_2, k_3 as defined in the standard pyrgeometer equation used by PMOD/WRC (C, k_1, k_2, k_3). These parameters serve for monitoring purpose in order to determine their long-term variations and are not operationally implemented.

Traceability of Atmospheric Longwave Irradiance to SI

The traceability of atmospheric longwave irradiance measurements to SI was initially established by an international campaign held in 1999 at the Atmospheric Radiation Measurement's Southern Great Plains site in Oklahoma (Philipona et al., 2001). There, two of the WISG pyrgeometers were calibrated relative to the Absolute Sky Scanning Radiometer (ASR). In 2008, the Infrared Integrating Sphere Radiometer (IRIS) was developed which provides independent traceability of atmospheric longwave irradiance measurements to SI through the WRS-IRC reference blackbody (Gröbner, 2012). Also, the Absolute Cavity Pyrgeometer (ACP) was developed which provides an independent traceability to SI (Reda et al., 2012). Both radiometers were intercompared during 5 intercomparisons between 2013 and

2017, demonstrating an agreement between IRIS and ACP within their combined uncertainties (Gröbner et al., 2014). During the latest intercomparison in 2017, the atmospheric longwave irradiance derived from the atmospheric emitted radiance interferometer (AERI) supported these findings with measurements consistent with IRIS and ACP.

Future Changes to the WISG and Traceability of Atmospheric Longwave Irradiance to SI

As with the World Radiometric Reference the WMO Congress will review and if appropriate, endorse recommended changes submitted by CIMO on the traceability of the WISG to SI. To assist in creating the recommendation CIMO will establish either task teams or ad hoc groups made up of invited experts on the traceability of atmospheric longwave irradiance to provide advice to WMO Congress.

The International Pyrgeometer Comparison (IPGC)

The International Pyrgeometer Comparison (IPgC) is held every 5 years during the same period as the International Pyrheliometer comparison (IPC) at PMOD/WRC. During this comparison, all participating pyrgeometers are calibrated outdoors relative to the WISG and characterised in the reference blackbody of the WRC-IRS. An ad hoc advisory group made up of experts in atmospheric longwave measurements will be established during each IPgC. Their tasks are, but not limited to:

(a) review the status of the WISG and evaluate its role as operational reference standard for providing a stable longwave reference and traceability to SI based on the analysis provided by PMOD/WRC,

(b) review progress in maintaining and improving traceability to SI,

(c) report their findings and recommendations to the President of CIMO.

Radiometers providing atmospheric longwave irradiance measurements with traceability to SI, such as the Absolute Cavity Pyrgeometer (ACP) developed by the National Renewable Energy Laboratory (NREL) and the IRIS developed by PMOD/WRC, will be invited to the IPgC. Their measurements will be evaluated by the ad hoc advisory group in view of improving traceability of the WISG to SI.

Implementation of a Quality System According to ISO 17025

A quality system according to ISO 17025 has been implemented since 2018 for the calibration activities of the Infrared Radiometry Section of the World Radiation Centre (WRC-IRS). Therefore, all tasks affecting the calibration activities within the WRC-IRS follow well defined and controlled procedures defined within this QM system and are continuously improved and reviewed through internal and external audits. The objective is to submit Calibration and Measurement Capabilities (CMC) for atmospheric longwave irradiance to the Key Comparison Database of the BIPM once the formal traceability to SI has been established.

References

Gröbner, J., Operation and Investigation of a tilted bottom cavity for pyrgeometer characterizations, Applied Optics, 47, 4441-4447, 2008.

Gröbner, J., A Transfer Standard Radiometer for atmospheric longwave irradiance measurements, Metrologia, 49, S105-S111,2012.

Gröbner, J., I. Reda, S. Wacker, S.Nyeki, K. Behrens, and J. Gorman (2014), A new absolute reference for atmospheric longwave irradiance measurements with traceability to SI units, J. Geophys. Res. Atmos., 119, doi:10.1002/2014JD021630.

Gröbner, J., and C. Thomann; World Meteorological Organization, Report on the 2nd International Pyrgeometer Intercomparison (27 September - 15 October 2015; Davos, Switzerland), WMO IOM report 129, 2018.

Philipona, R., et al. (2001), Atmospheric longwave irradiance uncertainty: Pyrgeometers compared to an absolute sky-scanning radiometer, atmospheric emitted radiance interferometer, and radiative transfer calculations, J. Geophys. Res., 106, 28,129–28,141.

PMOD/WRC, Annual report 2011, https://www.pmodwrc.ch/wp-content/uploads/2018/06/2011_PMOD_Annual_Report.pdf, page 10, 2012.

Reda, I., J. Zeng, J. Scheuch, L. Hanssen, B. Wilthan, D. Myers, and T. Stoffel (2012), An absolute cavity pyrgeometer to measure the absolute outdoor longwave irradiance with traceability to International System of Units, SI, J. Atmos. Sol. Terr. Phys., 77, 132–143, doi:10.1016/j.jastp.2011.12.011.

_____

World Meteorological Organization

COMMISSION FOR INSTRUMENTS AND METHODS OF OBSERVATION

Seventeenth Session
Amsterdam, The Netherlands, 12 to 16 October 2018

CIMO-17/INF. 2.2(2)
Submitted by:
Secretary-General
12.X.2018

REPORTS BY OPAG CHAIRS AND FOCAL POINTS

OPEN PROGRAMME EXPERT GROUP ON REMOTE-SENSING TECHNOLOGIES

1. Progress and Achievements

Expert Team on Operational Remote-Sensing Technologies (ET-ORST)

1.1 Special profiling techniques for the boundary layer and the troposphere have been developed to obtain data at high temporal and spatial resolution, which is needed for analysis, forecasting and research on the smaller meteorological scales and for various special applications. ET-ORST, under the leadership of Dr Lehmann Volker, updated the guidance provided in the CIMO Guide giving a general overview of current surface-based remote-sensing systems that can be used for these purposes. Some of these techniques can be used for measurements over the whole troposphere, and others are used in the lower troposphere, in particular in the planetary boundary layer. The main work of ET-ORST included analysing these surface-based remote-sensing systems work principle, main technical performance and specifications, actual application ability, etc. ET-ORST focussed on those surface-based remote-sensing systems, which are most effective in actual application, including acoustic sounders (sodars), wind profile radars, radio acoustic sounding system, microwave radiometer, laser radars (Lidar) and Global Navigation Satellite System (GNSS).

1.2 Tasks related to Operational Weather Radars were transferred to the Inter-programme Expert Team on Operational Weather Radars (IPET-OWR) upon its creation and are consequently reported under IPET-OWR.

Expert Team on New Remote-Sensing Technologies (ET-NRST)

1.3 Expert Team on New Remote Sensing Technologies established by CIMO-MG has been carrying out the following activities in accordance with the workplan approved by CIMO-MG-13:

(a) Intercomparison studies for LIDARS have been carried out, and the results of these studies have been documented.

(b) A common WMO-ISO standard on ground-based remote-sensing of wind by heterodyne pulsed Doppler LIDAR has been prepared and published by WMO, in the CIMO Guide, and by ISO as ISO document (ISO 28902-2).

(c) A document has been prepared on Argentinian LIDAR network within the scope of evaluation of operational use of new remote sensing technologies and should soon be available for publication as an Instruments and Observing Methods report.

(d) It is noted that the use of ground based microwave radiometers for several applications has been increasing. The chapter of the CIMO Guide has been revised to take into account the latest development of 1DVAR assimilation of radiometer data into a numerical weather prediction model, which provides real-time monitoring of water vapour profiles in the troposphere with many fine features.

(e) Technical and scientific studies within the scope of the COST action TOPROF (Towards operational ground based profiling with ceilometers, doppler lidars and microwave radiometers for improving weather forecasts) have been carried out for the development of a prototype consensus for measurement protocol, data format, processing scripts, as well as evaluating Doppler Wind Lidar (DWL) capabilities to provided additional information to the wind profile in the Atmospheric Boundary Layer (ABL), such as ABL height, cloud base height and aerosol backscatter profile within the ABL. A standardized data format (NetCDF) has been implemented.

(f) A survey on operational use of Passive Microware Profilers by the Members has been conducted. The results of the survey have been evaluated and the report has been prepared and submitted to the WMO secretariat.

(g) A draft report has been prepared on the uncertainty and traceability of GNSS measurements.

1.4 It was reported and concluded by the ET-NRST that:

(a) Although TOPROF COST action ended, there is still a lot of work to be done on defining the measurement requirements for data assimilation.

(b) Developments are ongoing by several institutions in the various new remote-sensing technologies, such as Doppler LIDAR, water vapour LIDAR, GNSS, microwave radiometer, and operationally making use of DWL to profile the ABL and better forecast the air quality. New technical methods are available in the market, and field trials have been conducted with these new technologies.

(c) It is important to ensure the continuity of the Lead Centres activities on the inter-comparison on the new technologies to be able to make them operationally available to meet the user requirements.

(d) An efficient information sharing mechanism between ETs and Lead Centres should be established.

(e) Members of the expert team should be encouraged to share their knowledge and experiences for ET activities. On the other hand, considering the busy agenda of the experts for their internal duties and work in their agencies, an efficient mechanism should be established to get more benefits from the experts within the limited time they can spend for ET activities.

(f) ET-NRST activities should be kept with new structure and new members, who can allocate more time to ET activities, in the next intersessional period.

(g) The information on new technologies may be posted at the WMO/CIMO website for promulgation and when the technology becomes more mature, the relevant information may be published as an IOM report or added to the CIMO Guide.

Theme Leader on Radio-Frequency Protection (TL-RFP)

1.5 Theme Leader on Radio-Frequency Protection (TL-RFP) assigned by CIMO-MG has been carrying out the following activities in accordance with the workplan approved by CIMO-MG-13:

(a) TL-RFP has provided his contribution to the activities of Steering Group on Radio-Frequency Coordination (SG-RFC), by considering the requirements of observing systems and observations for the frequencies on radio spectrum, by cooperating with related expert teams and task teams and by contributing to preparation of the WMO position document for the World Radiocommunication Conference (WRC-19) to be held in 2019.

(b) The WMO position document, prepared by SG-RFC reflects the preliminary WMO position on the agenda of the WRC-19 by highlighting the requirements and importance of radio spectrum for meteorological operations.

(c) It is noted that bandwidth requirements for Global Radiosonde Operations should be studied in detail, and a report should be prepared to provide scientific and demonstrative information to SG-RFC, which can be used to address WRC-19 Agenda Item 1.7.

(d) Frequency sharing arrangements for High Frequency oceanographic radars have been completed.

1.6 It was reported and concluded by the TL-RFP that:

(a) By considering the importance of the radio frequencies for meteorological operations, high priority should be given to radio frequency protection issue by CIMO-17 for next intersessional period.

(b) Wind turbines seem to remain an increasing threat for weather radars and wind profilers. Existing guidance statement for weather radars and wind turbine siting in CIMO Guide should be reviewed and updated with stronger statements for the Members. The IPET-OWR has taken over the task for wind turbine issues for weather radars, but this important task, in particular for wind profiler radars, should be considered for next intersessional period by CIMO-17.

(c) Wind turbines issue for wind profiler radars can be considered under the tasks of a team that will replace ET-ORST. Improvement of existing guidance statement and preparation of a regulatory material should be also considered in cooperation with IPET-OWR.

Inter-Programme Expert Team on Operational Weather Radars (IPET-OWR)

1.7 Two team meetings were held during the intersessional period:

(a) IPET-OWR-1: 13-17 March 2017, hosted by the Japan Meteorological Agency in Tokyo, Japan.

(b) IPET-OWR-2: 14-17 May 2018, hosted by the Korea Meteorological Administration in Seoul, Republic of Korea.

1.8 An online survey of WMO's Members on Operational Weather Radars was conducted in January-February 2017. The survey yielded a total of 86 responses containing valuable information that is used as guidance to the team in carrying out its work. The survey results were analysed and presented at IPET-OWR-1 and conclusions/recommendations were drafted prior to IPET-OWR-2.

1.9 A high-level document on weather radar network design and application has been produced.

1.10 Guidance has been drafted on operation of weather radar in mountainous terrain.

1.11 Updated guidance on radio interference and interference from wind turbines has been drafted. This is currently intended as an update of the existing Annexes 7.A and 7.B to the CIMO Guide, Part II, Chapter 7.

1.12 Work on weather radar data representation is on track, yielding an Information Model document, a Data Model document, a CfRadial 2.0 file format specification document, and a guidance document on how WMO's Members are to use CfRadial 2.0 for the purposes of data exchange. IPET-OWR proposes that:

(a) the information model, the data model, and the guidance on how WMO Members are to apply CfRadial 2.0, should constitute the single global standard weather radar data representation for the purposes of international exchange;

(b) IPET-OWR will continue to engage with the CBS Inter-Programme Expert Team on Codes Maintenance (IPET-CM), with the objective to develop a proposed process for the WMO governance and maintenance of the radar data representation standard; and

(c) To facilitate the development of the process, CIMO and CBS should consider adoption of the proposed weather radar data representation as a WMO standard.

1.13 A document proposing weather-radar data exchange methods has been produced.

1.14 Article on “Advances in weather radar data exchange” was published in WIGOS Newsletter (Vol. 4, No. 1, January 2018).

1.15 Engagement with the Implementation Coordination Team on Information Systems and Services (ICT ISS) through the Inter-Programme Expert Team on Codes Maintenance (IPET-CM) has begun, to ensure and verify that the proposed single weather radar data representation global standard meets WMO requirements for use and maintainability.

1.16 A radar calibration reporting software tool has been prototyped, potentially facilitating the validation and reporting of radar calibration results in a harmonized way.

1.17 Collaboration with field campaigns ICE-POP (Republic of Korea) and RELAMPAGO (Argentina) have been solicited as a means of performing weather radar calibration reporting intercomparison.

1.18 IPET-OWR participated in a Workshop on Radar Metadata for WIGOS, held 19-21 June 2017 in Locarno, Switzerland. A metadata mapping among IPET-OWR’s deliverables (point v. above), the WIGOS Metadata Standard, and WMO Weather Radar Database were produced.

1.19 IPET-OWR worked with the International Organization for Standardization (ISO) in drafting Part 1 of a common WMO-ISO standard for weather radar: ISO/DIS 19926-1:2017(E), currently in circulation for approval. Discussions on Part 2 addressing data quality/processing have commenced.

1.20 Liaison with Global Climate Observing System (GCOS) Atmospheric Observation Panel for Climate (AOPC) Task team for Weather radar data requirements for climate monitoring has been ensured.

1.21 Regarding coordination of / assistance with international training courses, syllabi for courses given in Turkey and the Republic of Korea were solicited and reviewed.

1.22 IPET-OWR participated in the WMO/ASEAN Training Workshop on Weather Radar Data Quality and Standardization, held 5-13 February 2018 in Bangkok, Thailand.

1.23 An article has been drafted for the WIGOS Newsletter on the WMO/ASEAN Training Workshop on Weather Radar Data Quality and Standardization.

1.24 A Weather Radar Best Practices Guide has been structured and is being populated with best practices. This is a multi-part Guide that will consolidate expertise and provide an end-to-end scope, intended as Guidance to Members.

2. Recommendations

Weather Radars

2.1 Regarding the elaboration of a collaboration with ISO on Part 2 of the common WMO-ISO weather radar standard, it is expected that ISO will establish a team in early 2019 and approach WMO to make it a joint team. It is recommended that the WMO expert membership of such a joint team be coordinated by the WMO Secretariat with the CIMO-MG's approval.

2.2 Regarding the proposed data representation for the purposes of international weather radar data exchange (point 1.4.2v. above), it is recommended that CIMO endorses this IPET-OWR proposal as a means for establishing the adoption by WMO of a single global standard for weather radar data representation and that CIMO should also seek CBS endorsement of this approach.

Other remote-sensing activities

2.3 CIMO should continue to promote the construction of the integrated testbeds, and take this as the grasp and foundation for CIMO's future work, promoting the development of ground-based remote sensing and marine meteorological observation equipment. Testbeds could be used to promote the development of weather radar technology.

2.4 Carry out international comparison of lightning location system, promote the operational application of lightning location system and upgrade its technical level. Lightning positioning network system have been built and applied in operation in many countries and regions and their role is becoming more and more important. However, the main operational specifications have not been compared internationally as in the case of the sounding system. Thus, carrying out an international comparison of lightning location systems with reference to the GPS sounding system could be envisaged to promote the technical progress of the lightning positioning system.

2.4 CIMO should continue to strengthen cooperation with the ISO and comprehensively promote the standardization of the ground-based remote sensing with emphasis on the standardization of weather radar, wind profile radar, Lidar and cloud radar, which should be incorporated into the new version of the CIMO Guide. Meanwhile, close attention should be given to the standardization of radar site determination, gradually establishing the standardization of various ground-based remote sensing equipment sites.

2.4 Rethink the structure of ET-ORST. The instruments the group has or had to deal with are quite diverse. While "weather radars" and "radar wind profilers" are both pulsed Doppler radars, the technical and scientific communities are very much separated. Furthermore, the lightning detection systems are totally disjunctive from radars. We suggest setting up small drafting teams of specialists, focusing only on a single technology. Integration and harmonization of materials prepared by these teams then needs another higher-level group of experts, who are able to bring all the specific information together in a consistent way. This will require an active editing of submitted contributions and a two-way communication with the specialist teams.

2.4 The megacities integrated observation experiments should be paid attention to and the application of the new ground-based remote sensing technology should be promoted in this context. Focus on megacities influence on urban meteorological environment, especially for the influence of the atmospheric boundary layer should be considered as a relevant activity, for example for assessing the influence of haze on urban meteorological environment. A variety of ground-based remote-sensing technology can be used to observe the vertical structure characteristics of megacities meteorological environment and the aerosol.

_____

World Meteorological Organization
COMMISSION FOR INSTRUMENTS AND METHODS OF OBSERVATION
Seventeenth Session
Amsterdam, the Netherlands, 12 to 16 October 2018

CIMO-17/INF. 2.2(3)
Submitted by:
Secretary-General
25.VII.2018

REPORTS BY OPAG CHAIRS AND FOCAL POINTS

OPEN PROGRAMME EXPERT GROUP ON CAPACITY DEVELOPMENT AND OPERATIONAL METROLOGY

1. Progress and Achievements

Estimation of calibration uncertainty – traceability to SI

1.1 In response to the Cg-17 request (§4.2.2.73) for regional associations and CIMO to further strengthen Regional Instrument Centres (RICs) and National Meteorological and Hydrological Service (NMHS) calibration laboratories, in particular with respect to the establishment of procedures for the estimation of calibration uncertainties, Instruments and Observing Methods (IOM) Report 119 http://library.wmo.int/opac/index.php?lvl=notice_display&id=17152) has been published. It includes theoretical background for the computation of calibration uncertainties and provides practical examples of uncertainty calculations for temperature, pressure and humidity. Course material has also been drafted for workshop and training units on uncertainty calculation. The material describes web-based courses comprising general introduction and theoretical background, and more detailed theory, standards, methods of calibration, uncertainty components and evaluation of uncertainty budget for each of the basic variables, with examples. These training units await selection of a suitable E-learning platform before being made available to Members on the WMO IMOP website.

RIC inter-laboratory comparisons

1.2 In response to a request (Resolution 27, Cg-17) for regional associations (RAs) to organize inter-laboratory comparisons (ILCs) of existing RICs, 18 NMHSs in Regional Association VI (Europe) have been inter-compared in the fields of temperature, relative humidity and pressure, in a joint partnership between the RICs and the Euramet MeteoMet project. A report of the intercomparison has been published as IOM Report 128 (https://library.wmo.int/opac/index.php?lvl=notice_display&id=20246#.WurUZq7XaM8).

1.3 RA VI ILC has served as a model for organizing a similar ILC involving RAs II (Asia) and V (South-West pacific). A Memorandum of Cooperation and an ILC protocol have been prepared for this by RIC Tsukuba, a roadmap for the ILC agreed among the RICs of China, Japan, Australia and the Philippines, with RIC Slovenia as the linkage laboratory. The ILC is underway.

1.4 A similar ILC is being planned for RA I (Africa), with RIC Casablanca (Morocco) providing the transfer standards.

1.5 With the benefit of experience gained from carrying out these inter-laboratory comparisons, ISO/IEC 17043:2010 standard “Conformity assessment – General requirements for proficiency testing” was used as a basis for updating *Guide to Meteorological Instruments and Methods of Observation* (WMO-No. 8) (CIMO Guide) Part IV Chapter 4 by inclusion of a new Annex 4D “Guidelines for organising inter-laboratory comparisons”. It describes procedures and aspects needed to be taken into account for efficient ILC including defining reference values and evaluation of the results.

Strengthening RICs and supporting their communication with their respective RA and Members

1.6 Two new RICs, Hamburg/Oberschleissheim (Germany) and Ankara (Turkey), were designated by the seventeenth session of RA VI following assessment and a positive recommendation from CIMO experts. Costa Rica has advised that its RIC is unable to continue providing support to Members of RA IV.

1.7 A webpage for each RIC was established on the CIMO website in 2013 but only twelve RICs (Alger, Ankara, Beijing, Bratislava, Buenos Aires, Casablanca, Hamburg/ Oberschleissheim (Germany), Ljubljana, Manila, Nairobi, Toulouse and Tsukuba) out of 16 have so far provided content. CIMO ET-OpMet continues to encourage those RICs that have not yet responded to the call for content to post and to regularly update information on their capabilities and achievements.

1.8 The RIC evaluation form has been refined and a RIC reporting form has been developed. These documents have been provided to all WMO Members hosting RICs with a request to confirm their willingness to continue to provide RIC services. Only three quarters have responded to date. The reports of those that have responded are posted on the WMO IMOP website.

1.9 A survey of the 15 RICs was conducted in 2017. Only 9 of the 15 RICs (60%) submitted annual reports as requested. The survey revealed that:

- Five of the RICs provided calibration services for Members;
- Five RICs provided capacity development/training activities within and beyond the RA;
- Six RICs developed and published guidance documents;
- Nine RICs have organised or participated in inter-laboratory comparisons;
- Five RICs collaborated with other RICs, Regional Radiation Centres (RRCs), Regional Training Centres (RTCs), NMHSs or National Metrology Institutes (NMIs) on standardization of meteorological and other related environmental measurements.

1.10 The degree of compliance with the different functions specified in the RIC Terms of Reference varies greatly from one RIC to another. It appears to depend to some extent to the needs of their respective regional association. While some RICs provide services beyond their Terms of Reference (for example, services to WMO Members beyond their Regional Association), the low number of responses to the survey shows an urgent need to re-establish communication and seek reaffirmation from the Members concerned of their continuing commitment to providing a RIC. Regional associations are urged to engage with those Members hosting RICs and to encourage them to assist CIMO to perform regular evaluations of their performance (Cg-17, §4.2.2.73).

1.11 A survey on meteorological instruments, calibration and training in RA II was carried out by RIC Tsukuba and the report has been published as IOM 122 (http://library.wmo.int/opac/index.php?lvl=notice_display&id=18527). The report concluded that meteorological instrument calibration in RA II is not performed adequately in a number of countries, that calibration and maintenance of meteorological instruments have been identified as major issues to be tackled by Members of RA II which will require support from RICs and RRCs, and that conventional instruments such as mercury barometers and liquid-in-glass thermometers are still in use in RA II.

1.12 A Web based survey on Members' needs for traceability assurance and capacity building was concluded in RA VI in early 2016. Many Members (one third) expressed interest in training on calibration and traceability.

Terms of Reference and Designation Process for RICs

1.13 The existing Terms of References (ToRs) of the RICs have been revised to tighten the requirements and to merge those for full functionality with those for basic functionality. The revised ToRs have been endorsed by the CIMO Management Group (MG). The two sets of ToRs had been almost identical except for the number of basic meteorological parameters for which they were providing services. The revised ToRs:

- Require all RICSs to have the necessary infrastructure, competent personnel, procedures and quality management system implemented (preferably ISO/IEC 17025 standard) to perform their functions (Cg-17, §4.2.2.72);
- Urge those without accreditation to achieve it as soon as possible (Cg-17, §4.2.2.72, §4.2.2.73);
- Acknowledge that a RIC can provide services beyond its region, if resources permit;
- Require participation in, or organisation of, inter-laboratory comparisons and support in field intercomparisons;
- Require organization of workshops on calibration and maintenance of meteorological instruments (Cg-17, §4.2.2.73); and
- Urge RICs to conduct or support the regular assessment of Members' needs for RIC services (Cg-17, §4.2.2.72).

The revised ToRs are provided in CIMO-17/Doc. 2.2(3).

1.14 Designation of a RIC is the responsibility of the relevant regional association. However, the process for RIC designation, supervision and reconfirmation had not previously been clearly defined. A draft proposal has been developed to specify a formal process commencing with a Member's nomination of a RIC to a regional association, followed by evaluation of the application by CIMO experts, then designation by the regional association subject to CIMO recommendation. Principles of supervision and a Member's periodic reaffirmation of its willingness to continue hosting a RIC are included. The proposed process is described in CIMO-17/Doc. 2.2(3). The seventeenth session of the WMO Executive Council (EC-70) has charged CIMO with assessing the capabilities of candidate RICs and requested CIMO to document the process for assessing the capabilities of a candidate RIC. Regional association may now formally designate a RIC, only upon positive assessment by CIMO of its capability to perform the functions of a RIC.

Implementation of the strategy for improving traceability of basic measurements (such as p, T, h) to SI

1.15 An Information Flyer on Traceability was developed and published. It is available on the WMO IMOP web page at:
(http://www.wmo.int/pages/prog/www/IMOP/publications/Flyers/Traceability_flyer.pdf).

1.16 A strategy for traceability assurance (calibration strategy) has been developed and will be included in the CIMO Guide Part I Chapter 1 as an Annex.

1.17 A methodology for the comparison/checking of AWS sensors at field stations is under development. The methodology will provide the necessary steps in establishing corrections for AWSs in the field.

Impact of Minamata convention

1.18 An outreach flyer on the impact of the Minamata convention on Mercury was developed and published. It is available on the WMO IMOP web page at (http://www.wmo.int/pages/prog/www/IMOP/publications/Flyers/Mercury_flyer.pdf). The potential implications of the Minamata Convention on Mercury are now properly reflected in the proposed new edition of the CIMO Guide.

Guidance for transition to alternative technologies from mercury-based and other obsolete or unserviceable instruments

1.19 Collaboration with the Expert Team on Operational In Situ Technologies (ET-OIST), the Expert Team on Developments in In Situ Technologies (ET-DIST) and Association of Hydrometeorological Equipment Industries HMEI has led to the development of guidance for Members on the replacement of mercury-based and obsolete meteorological instruments. The new material will provide guidance on possible paths for meteorological services to take in transitioning from the use of mercury-based and obsolete instruments to modern alternatives. It will provide information to help network managers to organize the process of transition.

Discontinuation of the regional standard barometer (RSB) concept and consequent update of corresponding WMO regulatory and guidance material

1.20 Historically, the RSB concept was valuable in enabling the traceability of pressure observations to be assured. These days, the traceability of atmospheric pressure measurements to SI units can be efficiently and economically provided through an unbroken traceability chain. Maintaining both systems is unnecessary. All Members holding RSBs were surveyed on this topic: all respondents agreed to discontinue the RSB concept. Accordingly, EC-69 decided (Decision 36) to discontinue the concept. The relevant section of the CIMO Guide (Part I, Chapter 3) has been updated accordingly.

Guide to Meteorological Instruments and Methods of Observation (CIMO Guide)

1.21 The 2014 edition of the CIMO Guide is now available online in five languages (Arabic, English, French, Russian and Spanish). The 2017 update is so far available in French and English.

1.22 All proposals by Members for modifications to the CIMO Guide were considered by appropriate CIMO experts and updates to the CIMO Guide were drafted where appropriate.

1.23 The CIMO Guide was examined in its entirety, and those chapters requiring substantial revision were identified and prioritized in collaboration with the WMO Secretariat.

1.24 Many of the chapters, once revised by the responsible expert teams, were reviewed by the CIMO Editorial Board and finalized for publication in the next edition of the CIMO Guide.

1.25 Other smaller changes to various sections of the CIMO Guide were proposed and drafted by responsible expert teams, and have been finalized for inclusion in the next edition.

1.26 A table of all changes to the CIMO Guide that will appear in the next edition (to be approved at CIMO-17) is contained in the Annex.

1.27 The CIMO Editorial Board proposed to CIMO MG a number of high level changes to the CIMO Guide. These were:

- A new volume on measurement of cryospheric variables be included in the CIMO Guide to account for the needs of the GCW;
- The title of the CIMO Guide be changed from “Guide to Meteorological Instruments and Methods of Observation” to “Guide to Instruments and Methods of Observation”, to better reflect that the CIMO Guide includes guidance on measurement of cryospheric variables and atmospheric composition;
- The term “Part” be replaced by “Volume” to bring the CIMO Guide into line with other WMO Guidance material and to shorten the time needed to publish updates.

CIMO MG agreed with these changes and proposed that they be included in the next edition of the CIMO Guide.

1.28 The CIMO Editorial Board proposed to CIMO MG that, with the recent advent of the WIGOS Editorial Board and the expected future workload involved in migrating material from the CIMO Guide to the WIGOS regulatory material in the years to come, and in harmonizing the material published in those documents, a dedicated new position as an associate member of the CIMO Editorial Board be created to fill this role. CIMO MG-15 agreed and requested Dr van der Meulen to serve in this role, since he is already a member of the WIGOS Editorial Board.

Radiosonde Performance Monitoring

1.29 The CIMO community was greatly saddened by the passing of Dr Alexander Kats (Russian Federation) in 2017, who had served very effectively as the CIMO Theme Leader on Radiosonde Performance Monitoring (TL-RPM) for many years up to his resignation in 2016.

1.30 Prior to Dr Kats’ departure, ECMWF and Roshydromet Central Aerological Observatory (CAO) upper-air performance monitoring geopotential statistics, displayed as maps and vertical plots, were routinely posted on a quarterly basis on the web, and were accessible via the WMO Volume A webpage. Contour lines of sun elevation had been added to the bias maps. A similar presentation for temperature and wind performance statistics was in test phase. It had been planned to add the presentation of maps of day-night temperature biases and to develop tools for analysing the performance of particular radiosonde types in simultaneous use at the same station.

1.31 TL-RPM had also regularly made contact with radiosonde operators in cases where the data submitted displayed problems either in the performance of the radiosondes or the coding of their data. This role had served greatly to improve the performance and valid reporting of radiosonde data worldwide.

1.32 TL-RPM served as a CIMO representative on the CBS IPET-DRMM and its Task Team on representing upper-air information in BUFR, to contribute on issues associated with the operation of radiosonde systems. Dr Kats co-authored a paper entitled “Progress towards high-resolution, real-time radiosonde reports” which promotes the production and use of native upper-air BUFR reports instead of TEMP and PILOT (to be published in BAMS).

1.33 Requests for code entries for new radiosondes/systems for China, Japan, Republic of Korea, Russian Federation and Switzerland were agreed with CBS IPET-DRMM following approval of respective amendments. Code entries for new Swiss radiosondes and NOAA/Vaisala dropsondes are under discussion. Thus, only India and South Africa still have outdated code entries for their radiosondes in Common Code Table C-2.

1.34 With the official launch of OSCAR/Surface on 2 May 2016, which replaces WMO Publication No. 9, Volume A, Observing Stations, and the WMO Catalogue of Radiosondes and Upper-air Wind Systems, it is anticipated that, subject to Member compliance with the needs for OSCAR, the workload involved in representing upper air statistics should be reduced. Notwithstanding this, there will be an ongoing need for a CIMO TL-RPM and CIMO MG is in the process of identifying and securing an appropriate replacement for Dr Kats.

International Cloud Atlas (ICA)

1.35 After EC-66 requested CIMO to carry out an extensive revision and update of the ICA, the Task Team on the International Cloud Atlas (TT-ICA) was reformed in August 2014. The work of the team took two and a half years, and thanks to the generosity of the Hong Kong Observatory (HKO) in building and hosting the website, the new web-based edition of the International Cloud Atlas was publicly released on World Meteorological Day 2017.

1.36 The public reception of the website was excellent. Between March and December 2017, the ICA web pages were accessed more than 750 000 times. TT-ICA members were requested to perform dozens of press interviews, numerous news articles appeared globally and more than 1 million were recorded through Facebook. In January 2018 the ICA was honoured with an Honourable Mention in the 2017 ASLI Choice Science Award from the Atmospheric Science Librarians International (ASLI). The citation reads, “For the visionary initiative to create an online, updated version of this renowned work”. This is the first award ASLI has presented to a website.

1.37 After its initial public release in March 2017, TT-ICA continued to work with HKO to refine the functionality of the ICA website and improve its content, until the site and its contents were finalized in mid-2018. In parallel, tools were developed by HKO to enable translation into all WMO languages: the ICA website is now being translated into all WMO languages.

1.38 As its final task, TT-ICA developed a list of recommendations for future potential improvements to the ICA website and contents, amongst these for the development, to be led by WMO Education and Training (ETR), of e-learning modules on cloud classification, leveraging the ICA (CIMO-17/Doc. 2.2(4)).

1.39 Its work complete, TT-ICA can now be disbanded. The WMO Publications Department is pursuing publication of the ICA as an e-book.

Competencies

1.40 CIMO-16 (§6.19) agreed to establish a task team composed of relevant experts to finalize the specification of staff competencies covering the entire range of instruments and methods of observation functions.

1.41 TT-Comp was formed in 2014 and subsequently developed four sets of competencies, for Observations, Instrumentation, Calibration (based on the draft competencies for calibration prepared by ET-OpMet) and Network and Programme Management. After thorough review by experts from CIMO and other relevant technical commissions, and by ETR experts, all feedback received was taken into account in finalizing the four sets of competencies. The final versions were presented to CIMO MG-15 for endorsement and to EC-70 for approval.

1.42 The high level competencies are being included in a new part of the WMO Technical Regulations and the detailed version is to be included in next edition of the CIMO Guide.

1.43 Its work complete, TT-Comp can now be disbanded.

2. Recommendations

2.1 Continue the development of training modules for basic meteorological quantities, potentially in collaboration with RTCs. Continue organizing training workshops on metrology, preferably using an e-learning platform, to assist implementation of the CIMO calibration strategy to achieve traceability of measurements to SI.

2.2 Collaborate with RMICs on traceability assurance and other related topics.

2.3 Encourage the improvement of RIC calibration facilities in areas not previously covered (e.q. wind speed, precipitation) and organize inter-laboratory comparisons in these fields.

2.4 Develop guidance material and e-learning modules on:

- Implementation of the CIMO calibration strategy;
- Performing field inspections; and
- Evaluation of uncertainty of calibration for wind speed and precipitation measurement systems.

2.5 Develop e-learning modules on cloud classification, based on the web-based version of the ICA, in collaboration with the training community, in particular with relevant RTCs.

2.6 Continue the activities of the CIMO Editorial Board but with increased future focus on harmonization of the CIMO Guide with the WIGOS regulatory material and with new responsibility for maintaining a watch on the operational status of, and public suggestions for improvements to, the International Cloud Atlas.

2.7 Consider expanding the membership of the CIMO Editorial Board, to reflect its expanded domain of responsibility.

2.8 Retain the position of Theme Leader on Radiosonde Performance Monitoring, subject to finding a suitable replacement for Dr Kats.

2.9 Consider reintroduction of regular CIMO newsletters, or some other form of regular communication, and include reports on suspect upper-air stations.

_____

ANNEX

TABLE OF DRAFT CHANGES TO THE CIMO GUIDE (2018 EDITION VS 2014 EDITION)

CHAPTER	TITLE	SIZE OF THE UPDATE*
PART I	**MEASUREMENT OF METEOROLOGICAL VARIABLES**	
1	General	Major
2	Measurement of temperature	Major
3	Measurement of atmospheric pressure	Major
4	Measurement of humidity	Major
5	Measurement of surface wind	Minor
6	Measurement of precipitation	Partial
7	Measurement of radiation	Minor
9	Measurement of visibility	Partial
12	Measurement of upper-air pressure, temperature, humidity	Minor
14	Observation of present and past weather; state of the ground	Minor
15	Observation of clouds	Partial
16	Measurement of atmospheric composition	Partial
PART II	**OBSERVING SYSTEMS**	
1	Measurements at automatic weather stations	Major
3	Aircraft-based observations	Minor
4	Marine observations	Partial
5	Special profiling techniques for the boundary layer and the troposphere	Partial
PART III	**SPACE-BASED OBSERVATIONS**	
3	Remote-sensing instruments	Minor
PART IV	**QUALITY ASSURANCE AND MANAGEMENT OF OBSERVING SYSTEMS**	
4	Testing, calibration and intercomparison	Partial
5	Training of instrument specialists	Partial
NEW PART	**MEASUREMENT OF CRYOSPHERIC VARIABLES**	
1	General	New
2	Measurement of snow	New

* Note: **Minor** indicates that only small changes were made to the chapter; **Partial** indicates that substantial changes were made to some sections of the chapter; **Major** indicates that substantial changes were made to the entire chapter; **New** indicates that an entirely new chapter has been added.

_____

World Meteorological Organization

COMMISSION FOR INSTRUMENTS AND METHODS OF OBSERVATION

Seventeenth Session
Amsterdam, The Netherlands, 12 to 16 October 2018

CIMO-17/INF. 2.2(4)
Submitted by:
Secretary-General
20.IX.2018

REPORTS ON THE ACTIVITIES OF THE COMMISSION

REPORTS OF THE FOCAL POINTS

Focal Point on Climate Observations and Services

1. Main focus of the Focal Point (FP) on Climate Observations and Services was on monitoring climate-related activities, either through a climate blog website or through direct contact with climate experts.

2. The identified major concerns of the climate community have included: a potential loss of reference stations due to the development of tiered observing networks, the trend in using radar and satellite data for climate monitoring, increased availability but questionable quality of the third-party data and experienced difficulties in gathering visual observations of weather phenomena.

3. CIMO Management Group agreed that CIMO should be more involved in developing guidance on the expected quality of various measurement types, including those already in place for a long time, thus supporting climate observations.

4. The focal point suggested that better value might be achieved from the establishment of a new liaison mechanism by the Presidents of Technical Commissions.

Focal Point on Disaster Risk Reduction

1. In December 2016 a meeting was organized for the Focal Points of Regional Associations, Technical Commissions and Programmes (DRR FP RA-TC-TP). During this meeting all focal points provided inputs on their specific Disaster Risk Reduction (DRR) issues. Proposals to improve the DRR Roadmap were also submitted to the meeting. For more details, please visit: https://public.wmo.int/en/events/meetings/2016-meeting-of-wmo-drr-focal-points-of-regional-associations-technical-0.

2. The DRR Roadmap had been updated and the current version 2.1 was published in April 2017. However "a coordinated, up-to-date organization-wide plan of action that will guide WMO activities in support of all components of disaster risk management" is still to be adopted and implemented.

3. Currently, much attention is given to early warning systems, with focus on Multi-Hazard Early Warning Systems (MHEWS), but detailed plans are not published yet. Therefore, further impact of these plans in relation to the Instruments and Methods of Observation Programme cannot be provided so far.

4. Although observing systems are crucial for appropriate hazard forecasting and nowcasting services, and early warning systems, the role of CIMO is limited within the DRR programme without a clear request to support (the improvement of) these services in future.

5. It is recommended to provide continuous support of the work done by the focal point acting on behalf of CIMO within DRR FP RA-TC-TP, especially in support of the DRR Roadmap and its implementation.

Focal Point on Gender Issues

1. The gender balance within CIMO has improved during the intersessional period, but it is still far from targeted 30 % female participation in the working structure of the Commission, as set up by the Seventeenth World Meteorological Congress.

2. CIMO-17 provides an excellent opportunity to recruit more talented women to CIMO activities. Thus, the CIMO Management Group requested that when inviting Members to propose experts for the new CIMO working structure, the invitation should clearly invite Members to propose more female candidates.

3. CIMO MG members agreed to be pro-active and to do their utmost to identify prospective female experts and encourage them not only to participate in the CIMO activities but also to take the leading roles, as appropriate.

Focal Point for the Executive Council Panel of Experts on Polar and High Mountain Observations, Research and Services

1. It was noted that CIMO and the Global Cryosphere Watch (GCW) had successfully collaborated during the WMO Solid Precipitation Intercomparison Experiment (SPICE). SPICE was one of the most demanding WMO/CIMO projects in all its phases, particularly from a management point of view. Recommendations from the experiment represent an impressive source of information for measurement of snow parameters, to be used by GCW and CIMO communities.

2. Efficient collaboration between CIMO and GCW continues and has already resulted in contributions to the update of the *Guide to Meteorological Instruments and Methods of Observation* (WMO-No. 8, the CIMO Guide), including a proposed new volume on measurement of cryospheric variables. Further updates of the CIMO Guide are expected to be built upon the outcomes of SPICE.

3. The focal point had experienced some difficulties in joining relevant meetings and obtaining documentation related to those meetings. It was suggested that a better mechanism for ensuring connectivity between CIMO and EC-PHORS should be found.

_____

World Meteorological Organization

COMMISSION FOR INSTRUMENTS AND METHODS OF OBSERVATION

Seventeenth Session
Amsterdam, The Netherlands, 12 to 16 October 2018

CIMO-17/INF. 2.2(5)
Submitted by:
Secretary-General
26.IX.2018

REPORTS ON THE ACTIVITIES OF THE COMMISSION

REPORT ON CIMO TESTBEDS AND LEAD CENTRES

Current CIMO Testbeds and Lead Centres

1. Current designated Testbeds (9):

- WMO-CIMO Testbed for Doppler Light Detection and Ranging (LIDAR) Systems for Aviation Applications (Hong Kong, China);
- WMO-CIMO Testbed for Cryosphere and Precipitation (Sodankylä, Finland);
- WMO-CIMO Testbed for GAW Observations of Reactive Gases and Aerosols (Hohenpeissenberg, Germany);
- WMO-CIMO Testbed, Lindenberg Meteorological Observatory - *Richard Assmann Observatory* (Lindenberg, Germany);
- WMO-CIMO Testbed for Ground-based Remote Sensing Observations (Cabauw, the Netherlands);
- WMO-CIMO Testbed for Integration of 3D Weather Observation System (Boseong, Republic of Korea);
- WMO-CIMO Testbed for Meteorological, Radiation and Ozone Observations – Voeykovo Main Geophysical Observatory (Voeykovo, Russian Federation);
- WMO-CIMO Testbed for Aerosols and Water Vapor Remote Sensing Instruments (Izana, Spain);
- WMO-CIMO Testbed for In-situ and Remote Sensing Synergistic Profiling (Payerne, Switzerland).

2. Current designated Lead Centres (3):

- WMO-CIMO Lead Centre on Process-oriented Observations, Lindenberg Meteorological Observatory - *Richard Assmann Observatory* (Lindenberg, Germany);
- WMO-CIMO Lead Centre on Precipitation Intensity - *Benedetto Castelli* (Genova, Vigna di Valle and Monte Cimone, Italy);
- WMO-CIMO Lead Centre on Evaluation of Precipitation Measurement Accuracy (Chupungnyeong, Republic of Korea).

3. An individual webpage has been developed for each CIMO Testbed and Lead Centre and is reachable from: http://www.wmo.int/pages/prog/www/IMOP/Testbeds-and-LC.html. It includes a general description of the site, and links to the detailed description of the Testbed/Lead Centre, as well as their regular biennial reports providing evidence of their projects and publications.

New Testbeds and Lead Centres During the intersessional period

4. Two calls for nominations of CIMO Testbeds and Lead Centres were announced during the intersessional period, February 2016 and May 2018. Five proposals were received.

These proposals were evaluated according to the designation process for establishment of CIMO Testbeds and Lead Centres (as approved by CIMO-XV). The process has led to the nomination of three new testbeds by the president of CIMO. These are:

- WMO-CIMO Testbed for Ground-based Remote Sensing Observations (Cabauw, the Netherlands);
- WMO-CIMO Testbed for Doppler Light Detection and Ranging (LIDAR) Systems for Aviation Applications (Hong Kong, China);
- WMO-CIMO Testbed for Meteorological, Radiation and Ozone Observations – Voeykovo Main Geophysical Observatory (Voeykovo, Russian Federation);

The remaining two proposals were judged to not fully meet the Terms of Reference for CIMO Testbeds and Lead Centres, and the proposals were better aligned with the Terms of Reference of a Regional Instrument Centre (RIC). Those countries have been encouraged to nominate their centres as RICs.

5. A late proposal was received in the second-half of August 2018 from China nominating two new Testbeds. The nomination includes the Marine Meteorological Science Experiment Base (MMSEB) at Bohe and Ground Based Integrated Meteorological Observation at Changsha. The CIMO leadership expressed appreciation for this late nomination, however due to lack of time the evaluation of those proposals will be performed after the CIMO-17 session.

Review of Existing Testbeds and Lead Centres

6. At its fifteenth session in Geneva from 26 to 29 March 2018, the CIMO Management Group considered the performance of each of the then designated six Testbeds and three Lead Centres as evidenced by each centre's regular reporting of its activities, its involvement in CIMO and regional activities, and the research carried out by each centre during the intersessional period.

7. The Management Group concluded that the performance of most of the centres had met the Terms of Reference during the intersessional period, with regular reports being posted on the centre websites and each making a significant contribution to observations science or capacity development for CIMO. Some concerns were noted about the performance of one Testbed and one Lead Centre and the relevant focal points were informed about possible ways for improvement. The CIMO Management Group agreed that all centres should retain their designation as a CIMO Testbed/Lead Centre.

Need for Improvements in Connectivity between Testbeds and Lead Centres and the CIMO Community

8. Despite the overall high performance of the Testbeds and Lead Centres, the CIMO Management Group found that the knowledge gained through the research results achieved by a number of the centres should be more effectively communicated to the CIMO community. To achieve better performance in this respect, the Testbeds and Lead Centres are encouraged to: provide access to their published papers through the WMO Testbed/Lead Centre website, preferably in English; and to add more photographs that visually show the capabilities of their facilities, to their respective webpages.

9. Expert teams together with assigned Testbeds and Lead Centres will be requested to collaborate more closely, particularly to use Testbed and Lead Centre research results as the basis for development of guidance material to be added to the CIMO Guide, to the benefit of all WMO Members.

10. It is expected that the proposed Expert Team on Capacity Development and Outreach will together with all Testbeds and Lead Centres, implement a mechanism to help disseminate in a timely manner major achievements of the Testbeds and Lead Centres to the CIMO community.

_____

World Meteorological Organization

COMMISSION FOR INSTRUMENTS AND METHODS OF OBSERVATION

Seventeenth Session
Amsterdam, The Netherlands, 12 to 16 October 2018

CIMO-17/INF. 2.2(6)
Submitted by:
Secretary-General
3.X.2018

REPORTS BY OPAG CHAIRS AND FOCAL POINTS

REPORT ON CONFERENCES

CIMO TECO-2016

1. The WMO Commission for Instruments and Methods of Observations (CIMO) organized the WMO Technical Conference on Meteorological and Environmental Instruments and Methods of Observation (CIMO TECO-2016) in Madrid, Spain, at the kind invitation of *Agencia Estatal de Meteorologia* (AEMET), from 27 to 30 September 2016. CIMO-TECO 2016 was held in conjunction with the Meteorological Technology World Expo 2016, 27-29 September, with the second International Workshop on Metrology for Meteorology and Climate (MMC-2016), 26-27 September, and with the first International Forum of Users of Satellite Data Telecommunication Systems (SatCom-2016), 27 September.

2. Under the CIMO-TECO 2016 theme "*Ensuring sustained high-quality meteorological observations from sea, land and upper atmosphere in a changing world*", almost 400 participants presented their achievements on the following topics:

(a) Traceability, uncertainty and standardization of meteorological and environmental measurements;

(b) Developments in observing technologies and systems;

(c) Intercomparisons, characterization and testing of instruments and methods of observation;

(d) Challenges and opportunities for continuous improvement in observing technologies;

(e) Special session dedicated to the 100 years anniversary of continuous observations at the Izaña Observatory, which acts as CIMO Lead Centre.

Participants also benefited from three, well-attended discussion sessions on:

(a) Benefits and Challenges of Transitions to Automated Observation.

(b) Big data: What are the Opportunities and Threats?

(c) CIMO Vision for 2040: Where do we want to be and where do we need to be?

The 2016 Professor Dr Vilho Väisälä Awards ceremony also took place as a part of the conference.

3. All the posters and presentations from CIMO-TECO 2016 are compiled as an Instruments and Observing Methods No. 125 (IOM-125) report. They are accessible, together with the video from the conference, from:
https://www.wmo.int/pages/prog/www/IMOP/publications-IOM-series.html.

4. Results of the feedback survey show that most of the respondents found their participation at CIMO-TECO 2016 well worthwhile. A duration of four days is considered as a good duration for 88 % of the survey respondents. 83 % of the respondents think that having CIMO TECO in conjunction with Meteorological Technology World Expo is very beneficial. Among proposals for improvement in the future, respondents particularly highlighted a need for a better treatment of the posters and a less noisy conference room.

ICAWS-2017

5. The WMO Commission for Instruments and Methods of Observations (CIMO) took the lead in reviving the concept of AWS conferences that were held from 1996 to 2006. CIMO organized, in collaboration with the Commission for Basic Systems (CBS), the International Conference on Automatic Weather Stations in 2017 (ICAWS-2017). The conference was held in Offenbach am Main, Germany, at the kind invitation of *Deutscher Wetterdienst (DWD)*, from 24 to 26 October 2017.

6. Around 100 participants, under the ICAWS-2017 theme "*Automatic weather stations for environmental intelligence – the AWS in the 21st century*" addressed the following topics:

(a) Initiating automation and supporting migration from manual to automated measurements ;

(b) Communications, data transmission, encoding, archiving and storage;

(c) Sustainability of the measurements;

(d) New developments, interoperability, intelligent measurements, and integration.

Discussion sessions comprised topics on:

(a) Automation of measurements – training needs and competences.

(b) Working with non-NMHS (partner) data.

(c) Low-cost AWSs – opportunity of threat to meteorological measurements.

The participants of the discussion sessions proposed that WMO considers carrying out the following activities to support them:

(a) develop focused guidance material on different areas of automation of measurements and make accessible already available material in a concise manner,

(b) prepare guidance documentation on donor funding projects,

(c) implement videos and social media in training activities,

(d) pay particular attention to data quality management, including quality assurance and quality control in order to provide the right information to the right audience,

(e) make WMO regulations widely known to partner networks,

(f) organize more intercomparisons of low-cost AWSs and share results among the WIGOS community,

(g) standardize information on what fit-for-purpose means and link it to user requirements for different application areas,

(h) develop testing framework for low-cost AWSs (for field and laboratory testing) and develop relevant guidance material.

7. All the posters and presentations from ICAWS-2017 are compiled as an Instruments and Observing Methods No. 127 (IOM-127) report and accessible from: https://www.wmo.int/pages/prog/www/IMOP/publications-IOM-series.html.

8. The feedback survey has shown that 2/3 of respondents found the quality of presented papers as excellent and would like to see the next ICAWS organized in 2019. For more than 80 % of participants being a part of this event was well worthwhile and duration of three days was considered as just right duration. Proposals for the improvement in the future include: organization of these conferences should be one of the priorities of WMO, more manufacturers should be engaged, the conferences should take place closer to developing countries, and accommodation should be much more affordable (costs were very high due to a fair).

_____

World Meteorological Organization

COMMISSION FOR INSTRUMENTS AND METHODS OF OBSERVATION

Seventeenth Session
Amsterdam, the Netherlands, 12 to 16 October 2018

CIMO-17/INF. 2.3(2)
Submitted by:
Secretary-General
28.VIII.2018

COMMON WMO/ISO STANDARD ON WEATHER RADARS

1. Following the Agreement on Working Arrangements between the World Meteorological Organization (WMO) and the International Organization for Standardization (ISO), the ISO Technical Committee (TC) 146, Air quality, Subcommittee (SC) 5, Meteorology has developed, in a close collaboration with the experts of the Commission for Instruments and Methods of Observation (CIMO), the draft common WMO/ISO standard on *Weather radars – Part 1: System performance and operation.*

2. The draft common WMO/ISO standard was reviewed by the CIMO Inter-Programme Expert Team on Operational Weather Radars and the CIMO Management Group, who both support its publication.

3. Purpose of this draft standard is to support countries who plan to install and operate a weather radar but lack the necessary technical experience. Particular attention is given to long-term performance, stability, availability, affordable maintenance and acceptance tests. The draft standard describes system performance of ground-based weather radar systems measuring the atmosphere using frequencies between 2 GHz and 10 GHz, which are suitable for area-wide detection of precipitation and other meteorological targets at different altitudes. It also describes ways to verify the different aspects of system performance including infrastructure.

4. The common WMO/ISO standard will be published, when both, WMO and ISO, provide their approval. It will be published by ISO as *ISO 19926-1:2018(E)* international standard, and by WMO as an annex to the Part II, Chapter 7 of the *Guide to Meteorological Instruments and Methods of Observation* (WMO-No. 8, CIMO Guide). These two separate documents will have identical content.

5. Aiming at ensuring WMO approval, the draft standard has been made available to all WMO Members for review, on the WMO website at: http://www.wmo.int/pages/prog/www/IMOP/ISO/Std_Radar_Part1_For_Members_Review.pdf, as well as in the Annex to this document.

_____

Annex: 1

ANNEX

Weather radar – Part 1: System performance and operation

(Draft text of the common ISO/WMO standard)

This document was prepared by Technical Committee ISO/TC 146, Air quality, Subcommittee SC 5, Meteorology, and by the World Meteorological Organization (WMO) as a common ISO/WMO Standard under the Agreement on Working Arrangements signed between the WMO and ISO in 2008.

Draft for Members' Review

© World Meteorological Organization, 2018

Draft for Members' Review

© World Meteorological Organization, 2018

The right of publication in print, electronic and any other form and in any language is reserved by WMO. Unless otherwise specified, no part of this publication may be reproduced or utilized in any form or by any means, electronic or mechanical, including photocopying and posting on the internet or an intranet, without prior written permission. Editorial correspondence and requests to publish, reproduce or translate this publication in part or in whole should be addressed to:

Chairperson, Publications Board
World Meteorological Organization (WMO)
7 bis, avenue de la Paix
P.O. Box 2300
CH-1211 Geneva 2, Switzerland

Tel.: +41 (0) 22 730 8403
Fax: +41 (0) 22 730 8040
E-mail: Publications@wmo.int

NOTE

The designations employed in WMO publications and the presentation of material in this publication do not imply the expression of any opinion whatsoever on the part of WMO concerning the legal status of any country, territory, city or area, or of its authorities, or concerning the delimitation of its frontiers or boundaries.

The mention of specific companies or products does not imply that they are endorsed or recommended by WMO in preference to others of a similar nature which are not mentioned or advertised.

The findings, interpretations and conclusions expressed in WMO publications with named authors are those of the authors alone and do not necessarily reflect those of WMO or its Members.

This publication has been issued without formal editing.

Introduction

The rapid development of weather radar occurred just before and during the Second World War. Initially, radar was demonstrated at long (10 m to 50 m) wavelengths but quickly moved to shorter wavelengths (3 cm and 10 cm) with the requirement for, and development of compact and high power transmitters. C Band (5 cm) wavelengths were available in the late 1950's. The first operational Doppler radars appeared in the mid-1980's with demonstration of its application in operations and the availability of high speed, affordable processors and efficient software codes. The adoption of Dual-polarisation capability for operational radars followed in the mid to late 1990's.

Radars provide localized, highly detailed, timely and three dimensional sensing and observing capability that no other meteorological monitoring system can provide. They are able to measure variations in precipitation rates at a resolution of a few square kilometres or better and at time cycles of the order of a few minutes and provides the capability to monitor rapidly evolving weather events that is critical for the provision of early warnings of severe and hazardous weather. This includes heavy rain, hail, strong winds (for example tornadoes and tropical cyclones) and wind shear and hence it has the highest impact on society of all the weather elements. Doppler and dual-polarisation radars are able to resolve the high variability of wind and precipitation types, even see insects or clear air turbulence used to predict the onset of thunderstorms and for measuring vertical wind profiles. Dual-polarisation is also used for quality assurance and to improve precipitation estimates.

With high speed telecommunications and data processing, radar systems are now networked to better monitor large scale weather phenomena such as tropical cyclones and major extra-tropical storms (both summer and winter). The data derived from the networking of radars can provide longer lead times (from 60 min to 90 min to several hours) for early warnings. Numerical Weather Prediction systems have also now advanced and the assimilation of continental-scale radar-derived precipitation data into global models can significantly improve the 4 to 5 day precipitation forecasts of neighbouring areas and continents.

The provision of homogeneous, high quality data starts with the installation and use of appropriate radar technology for the local weather environment and conditions. The wavelength of the radar, the beam width of the antenna, the type and power of the transmitter, the sensitivity of the receiver and the wave form all have significant impacts on the resolution and quality of radar data. Weather radars have traditionally been specified and configured to meet local requirements for weather monitoring and surveillance and to cater for local geography and other factors, leading to a globally diversity in technology and in sampling strategies. These all impact on different data quality metrics such as availability, timeliness and accuracy. These metrics also rely on the operation and maintenance of the radar systems through adherence to prescribed and standardised procedures and practices. This requires the establishment of standards, technical specification best practices and guidelines for network design, site selection, calibration, system and equipment maintenance, sampling and data processing and distribution.

1 Scope

This document describes system performance of ground-based weather radar systems measuring the atmosphere using frequencies between 2 GHz and 10 GHz. These systems are suitable for area-wide detection of precipitation and other meteorological targets at different altitudes. This document also describes ways to verify the different aspects of system performance including infrastructure. This document is limited to linear polarisation parabolic radar systems, dual polarisation and single polarisation radars. Fan beam (narrow in azimuth and broad in elevation) are not considered and these include marine and aeronautical surveillance radars which have been used but not primarily designed for weather applications. Phased array radars with electronically formed and steered beams, including multi-beam, with non-circular off-bore sight patterns are new and insufficient performance information is available.

Draft for Members' Review

© World Meteorological Organization, 2018

This document is not describing weather radar technology and its applications. Weather radar systems can be used for applications like quantitative precipitation estimation (QPE), the classification of hydrometeors (e.g. hail), the estimation of wind speeds or the detection and surveillance of severe meteorological phenomena (e.g. microburst, tornado). Some of these applications have particular requirements for the positioning of the radar system or need specific measurement strategies. However, the procedures for calibration and maintenance described in this document apply here as well.

This document addresses manufacturers and radar operators.

The purpose of this document is wide and addresses organisations in all countries using weather radar with particular emphasis on countries that have not yet a long tradition of weather radar operation and usage:

— support of manufacturers to maintain a comparable and high level of competitive weather radar systems;

— aid for tendering authorities to take into account the state of the art of system performance merely than component definitions in their documents and, thus, to help to compare different incoming bids;

— provision of a valid documentation on potential and limitations of weather radar systems, thus support capacity building world wide;

— advice on the general requirements for siting, operation, maintenance and calibration tasks to keep radar systems on a high level of data quality and availability;

— description of the required range of tasks for operating and maintaining weather radar systems in order to let managers allocate enough financial resources and staff capacity for this purpose.

Further information such as the fundamentals of weather radar measurement can be found in [1].

2 Normative references

The following documents are referred to in the text in such a way that some or all of their content constitutes requirements of this document. For dated references, only the edition cited applies. For undated references, the latest edition of the referenced document (including any amendments) applies.

There are no normative references in this document.

3 Terms and definitions

For the purposes of this document, the following terms and definitions apply.

ISO and IEC maintain terminological databases for use in standardization at the following addresses:

— IEC Electropedia: available at http://www.electropedia.org/

— ISO Online browsing platform: available at http://www.iso.org/obp

There are no terminological entries in this document.

4 Abbreviated terms

ADC analog digital converter

AZ azimuth

Draft for Members' Review

© World Meteorological Organization, 2018

BITE build-in test-equipment

BPF band-pass filter

CW continuous wave

EL elevation

FTE full time equivalent

HPBW half power beam width

ITU-R International Telecommunication Union, Radiocommunication Sector

LDR linear depolarisation ratio

LNA low noise amplifier

NF number of failures

NMHS national meteorological and hydrological service

MSRT mean service restoration time

MTBF mean time between failures

PPI plan position indicator

PRT pulse repetition time

QPE quantitative precipitation estimation

RF radio frequency

SG signal generator

SNR signal-to-noise-ratio

STALO stable local oscillator

STAR simultaneous transmit and receive

TR transmit/receive

TTPM total time for preventive maintenance

TWT traveling wave tube

UPS uninterrupted power supply

5 Basics

5.1 Frequency bands

A weather radar is a system that is designed to measure hydrometeors in a large area, using a remote sensing technology based on micro waves. The micro waves of S, C and X bands are used in many cases and the scale and observation characteristics of the system are different depending on the characteristics of each frequency (wavelength). S-band systems are large, and their observation range is

Draft for Members' Review

© World Meteorological Organization, 2018

wide, while X-band systems are compact and their observation range is narrow. The useful range of S-band and C-band radars are typically limited by earth's curvature (≥300 km), whereas at X-band the limit is normally attenuation dependent (50 km to 100 km). See [1] for more detail. Table 1 shows the typical items for each frequency band.

Table 1 — Typical specification for different frequency bands of weather radar

Frequency Band	Frequency range [a)]	Antenna diameter [b) c)]	Rain attenuation (two-way) at 30 mm/h [d)]
S	2,700 GHz to 3,000 GHz	8,5 m	0,02 dB/km
C	5,250 GHz to 5,900 GHz	4,2 m	0,13 dB/km
X	9,300 GHz to 9,800 GHz	2,4 m	1,22 dB/km

[a)] Operating frequency range differs from each country.
[b)] For more info on frequency band and antenna size, refer to [1] Chapter 7.6.8
[c)] Typical values for a 1° half power beam width
[d)] For attenuation due to rain, refer to [1] Chapter 7.2.3

It is necessary to select the frequency band according to the range of observation and the scale of system at the location.

5.2 System configuration

5.2.1 Overview of radar system component units

Figure 1 shows the basic configuration of a radar system. Antenna mounted receivers (and in some cases transmitters) are also becoming common recently.

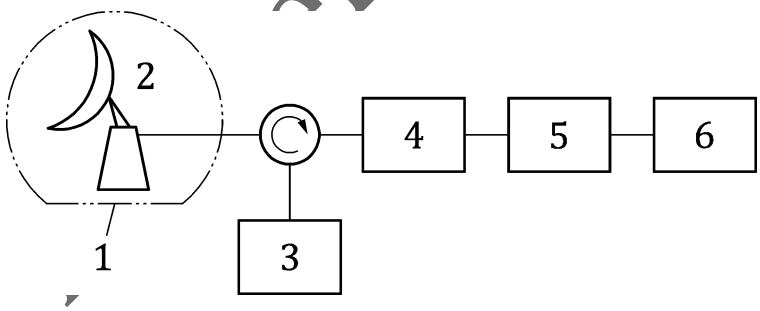

Key

1 Radome
2 Antenna
3 Transmitter
4 Receiver
5 Signal processor
6 Data processor

Figure 1 — Configuration and diagram of radar system

The weather radar system is divided into single polarisation type (which is quite always horizontal) and dual polarisation type, where both horizontal and vertical polarisations of the emitted and received micro waves are used. The dual polarisation type is further divided into dual polarisation distribution transmitter type which distributes single transmitter output and dual polarisation independent transmitter type which has two independent systems of transmitter.

Draft for Members' Review

© World Meteorological Organization, 2018

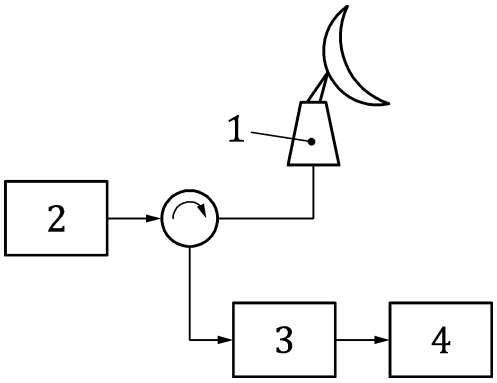

Key

1 Antenna
2 Transmitter
3 TR limiter
4 Receiver

Figure 2 — System diagram of single polarisation type

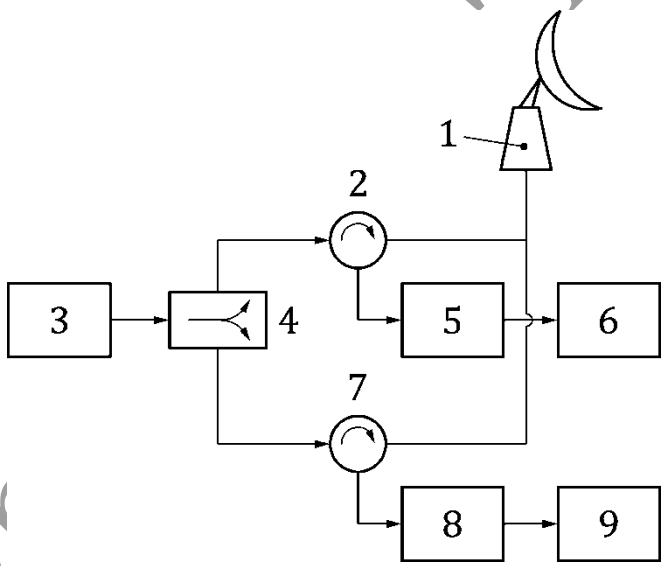

Key

1 Antenna
2 Horizontal polarisation (H) channel
3 Transmitter
4 3dB Power splitter
5 TR limiter
6 Receiver (H channel)
7 Vertical polarisation (V) channel
8 TR limiter
9 Receiver (V channel)

Figure 3 — System diagram of dual polarisation distribution transmitter type

Draft for Review

© World Meteorological Organization, 2018

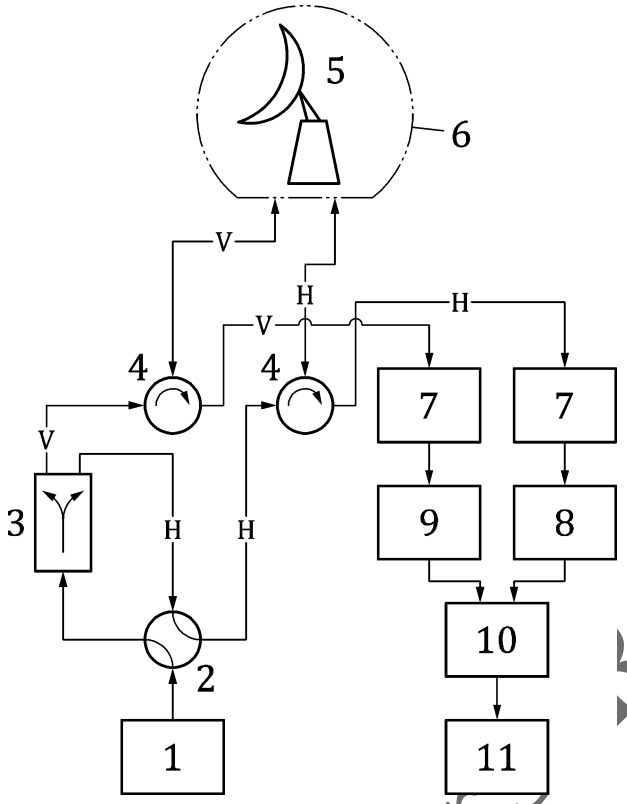

Key

1 Transmitter
2 Polarization mode switch
3 3 dB power splitter
4 Circulator
5 Antenna
6 Radome
7 TR Limiter
8 Horizontal polarization receiver channel
9 Vertical polarization receiver channel
10 Signal processor
11 Data processor

Figure 4 — System diagram of dual polarisation distribution transmitter type plus additional LDR mode

Draft for Members' Review

© World Meteorological Organization, 2018

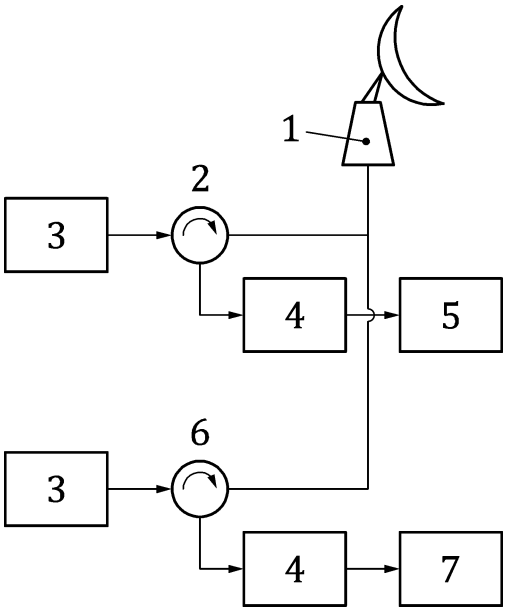

Key

1 Antenna
2 Horizontal polarisation (H) channel
3 Transmitter
4 TR limiter
5 Receiver (H channel)
6 Vertical polarisation (V) channel
7 Receiver (V channel)

Figure 5 — System diagram of dual polarisation independent transmitter type

5.2.2 Dual-polarisation transmit modes

Depending on the transmitter system (see types dual-polarisation distribution transmitter or independent transmitter above) different transmit modes are available.

5.2.2.1 STAR or hybrid mode

In STAR (simultaneous transmit and receive) mode a linear horizontal and a vertical polarized wave is transmitted simultaneously and each of it is received by the respective receiver chain. The advantage of this technique is that it can be used with a single transmitter (distributed transmitter type), no expensive second transmitter is required, a simple power splitter in the transmit path is sufficient. The disadvantage is that in case of a depolarizing medium (e.g. melting layer, wet or melting hail) a cross-talk between horizontal and vertical waves occurs and contamination of radar products (like differential reflectivity Z_{dr}) will happen.

5.2.2.2 Alternate H/V mode

In the alternate H/V mode horizontal and vertical polarized waves are transmitted alternatively from pulse to pulse. Two receivers will receive the co-polar and the cross-polar signal for each pulse. The advantage of the alternate H/V mode is that both, the co-polar and cross-polar components of the scatter matrix can be measured. If the radar is of the distributed transmitter type, a polarisation switch is required instead of the power splitter. Fast high-power switches are currently expensive and brittle. For that reason, alternate H/V mode is normally only used for research radars, which are not operated continuously. In case that the radar uses two independent transmitters, the alternate H/V mode can be simulated by transmitting alternately every second pulse per transmitter.

Draft for Members' Review

© World Meteorological Organization, 2018

5.2.2.3 LDR mode

The LDR mode is a special mode enabling radars build in the distribution transmitter type configuration (see Figure 4) to measure the linear depolarisation ratio (LDR). LDR is the ratio between cross-polar reflectivity and co-polar reflectivity. LDR is a good indicator for melting layer or wet or melting hail and ground clutter. To enable LDR mode a bypass around the power splitter is necessary. This bypass will send the transmit power only to the horizontal feed. On receive the horizontal polarisation receiver measures the co-polar signal, the vertical polarisation receiver measures the cross-polar signal. Typically, a slow switch (switching time app. 1 s to 3 s) is used and changing between STAR mode and LDR mode will be performed only after one plan position indicator (PPI) scan. Except LDR no other dual-polarisation product can be measured.

5.2.3 Description of components

5.2.3.1 Antenna

A directional antenna is used to concentrate energy into a narrow beam. A parabolic reflector type is generally used. The size of the antenna to obtain the same beam width is different depending on the frequency used. If the wavelength is shorter, the same beam width is realized by a parabolic antenna with smaller diameter. Generally, a single antenna has the dual purpose of transmission and reception. In addition, the antenna is divided into single polarisation type (one feed horn) and dual polarisation type (feed horn capable of separating two orthogonal polarisations).

Phased array antenna is an emerging technology for weather radars, where the antenna is a panel of several solid-state emitters; see Annex F for more details.

5.2.3.2 Radome

A radome is used to cover the antenna and to protect it from rain, wind, ice and snow. The radome is formed as spherical or dome type by combining multiple number of panels. The radome has a variety of types depending on the size and the purpose of observation of antenna.

The radome for dual polarisation is devised to show a behaviour as uniform as possible for both horizontal and vertical polarized waves crossing the radome. This can be achieved by proper design of the panels shapes, for example by using geodesic or quasi-random geometry of these panels.

The radome will introduce some losses; see Annex A.2.8.1 for estimation of losses of a dry radome. It has to be noted that water, snow, or ice on the radome can lead to strong losses (some dB).

5.2.3.3 Transmitter

5.2.3.3.1 General aspects

A transmitter is a device to generate transmission radio wave. It generates high-power microwave pulse stably and radiates radio wave into the air via antenna. There are two types of transmission devices: electron tube (magnetron, klystron, traveling wave tube (TWT), etc.) and semiconductor (solid-state). For TWT and solid-state transmitter, the pulse compression technology is applied to obtain fine resolution and to increase SNR.

In pulse compression radars, usually a long and short pulse are transmitted alternately, since while transmitting a long pulse blind range is generated and this needs to be covered.

Draft for Members' Review

© World Meteorological Organization, 2018

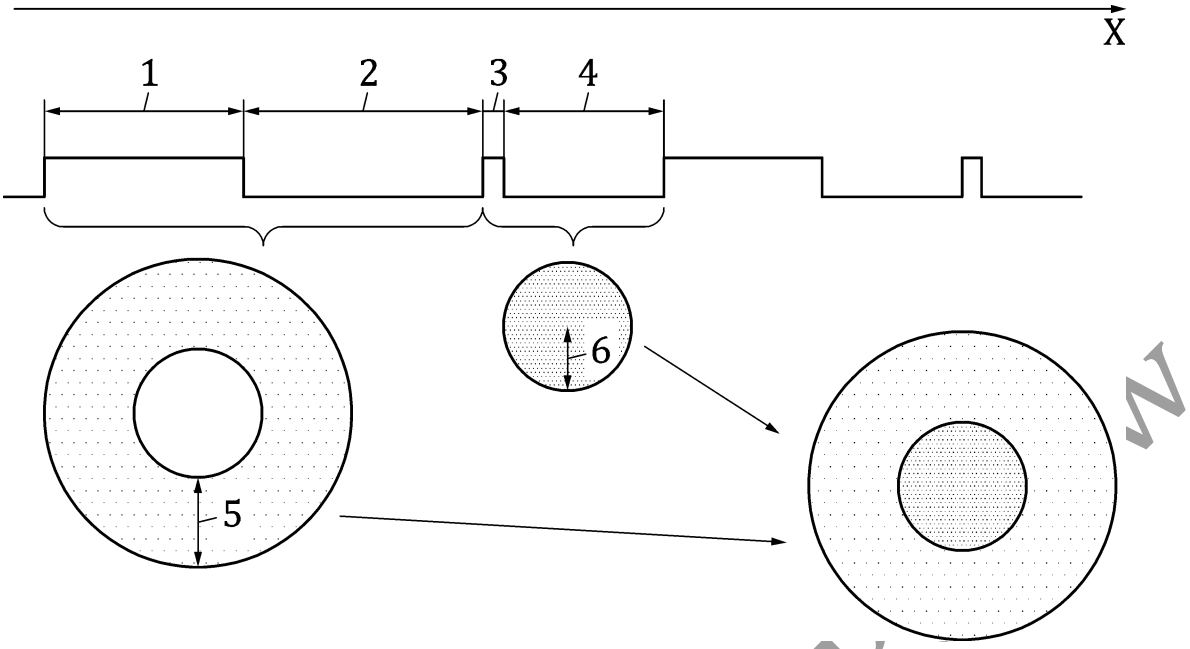

Key

1 Long pulse transmission
2 Long pulse reception
3 Short pulse transmission
4 Short pulse reception
5 Observation range by long pulse
6 Observation range by short pulse
X Time

Figure 6 — Long/short pulse transmission example

5.2.3.3.2 Transmitter duty cycle

In a pulsed radar system, the transmitter RF power is on only a small portion of the time. The rest of the time is spent receiving the echoes from the atmosphere. The portion of time which the transmit power is on, is called the transmitter duty cycle. The duty cycle together with the peak power determine the average power or energy radiated into the atmosphere.

In a weather radar transmitter using a tube transmitter (magnetron or klystron), the duty cycle is typically in the order of 1 %. This leads to a typical average power of a few hundred W. In TWT transmitters, the peak power is typically lower, and longer pulses similar to solid-state transmitters are used. The peak power of the tube transmitters ranges from tens of kW to MW, depending on the application and frequency of the radar.

In a weather radar transmitter using a solid state (semiconductor) transmitter, the duty cycle is typically in the order of 10 %, leading again to similar average power of a few hundred W (some tube transmitters, like e.g. TWT transmitters, also rely on low peak power and high duty cycle, similar to the solid-state transmitters).

5.2.3.3.3 System pulse width range

In electron tube devices, short pulses with high peak power are typically used. The pulse width is in the order of 1 μs (ranging from 0,3 μs to 5 μs in magnetron and klystron transmitters).

The pulse width of a solid-state transmitter is typically in the order of 100 μs (ranging from 20 μs to 200 μs) corresponding to a range of 15 km, and pulse compression technique is used to achieve similar

Draft for Members' Review

© World Meteorological Organization, 2018

range resolution as with the short pulses from a tube transmitter. Often there is also a separate short pulse covering the close distances, which are masked by the long transmit pulse (see Figure 6).

5.2.3.3.4 Pulse repetition frequency

The pulse repetition frequency (f_{PRF}) or the time interval between triggering radar transmit pulses (PRT) is a parameter which can be defined by the radar operator. However, there are several constraints for the selection of the f_{PRF}. High f_{PRF} will reduce the unambiguous maximum range $r_{\max}$ of a radar. Radar echoes from distances beyond $r_{\max}$ will be displayed as second-trip echoes.

$$r_{\max} = \frac{\mathrm{c}}{2 f_{\mathrm{PRF}}} \tag{1}$$

where

c is the speed of light.

EXAMPLE For a maximum range of 250 km, f_{PRF} should not be higher than 600 Hz.

On the other hand, high f_{PRF} is necessary for a broad unambiguous Doppler velocity range v_{a} (often called as Nyquist interval). Below λ is the wavelength of the pulse emitted by the radar.

$$v_{\mathrm{a}} = f_{\mathrm{PRF}} \frac{\lambda}{4} \tag{2}$$

For a C-band radar at a f_{PRF} of 600 Hz, v_{a} would be in the order of 8 m/s which is too low for the observation of most meteorological phenomena.

With modern signal processing several techniques exist to overcome these physical constrains. Dual-f_{PRF} or staggered-PRT techniques allow for the extension of the Nyquist interval by a factor of two to three or even more. Various second-trip recovery techniques allow for the elimination or recovery of second-trip echoes.

The f_{PRF} of transmitters is limited by the duty-cycle, see Clause 5.2.3.3.2

Typical ranges of f_{PRF} for X-, C-, S-band radars are 300 Hz to 2000 Hz. The higher f_{PRF} are needed for X band radars, to compensate for the wave length impact on v_{a} in Formula (2). This leads to low $r_{\max}$ in Formula (1) and so for X band radars second trip echoes removal is often mandatory.

5.2.3.4 Receiver

The receiver is the device to amplify and detect the radio wave which is returned to the antenna and extract amplitude information and phase information from the received signal. The receiver is protected from the transmitted power by a circulator and/or T/R-limiter.

Pulse compression radars apply frequency modulation at long pulse transmission, and with pulse compression processing in the receiver, achieve the same SNR and range resolution in the range sampled by the modulated pulse as a radar with tube transmitter. The SNR of the range sampled by the short pulse is lower than that of the range sampled by a tube transmitter radar.

The combination of short and long pulse increases effective dynamic range from close to far range similar as sensitivity time control (STC)[1].

---

[1] Sensitivity time control is used to attenuate strong signals at close ranges. Is not necessary for receiver systems with a large dynamic range.

Draft for Members' Review

© World Meteorological Organization, 2018

5.2.3.5 Signal processor

A signal processor processes the digitized amplitude information and phase information data from the receiver and calculates a variety of key variables which are necessary for observation such as rainfall intensity and rainfall moving radial velocity.

Typical output data for a dual polarisation radar are shown as follows:

— Reflectivity factor (Z)

— Differential reflectivity (Z_{dr})

— Doppler velocity (V)

— Spectrum width (W)

— Differential phase(Φ_{dp})

— Correlation coefficient between Z_{h} and Z_{v} (ρ_{hv})

5.2.3.6 Data processor

A data processor generates the weather products according to the purpose of the radar system, based on a variety of key variables which are extracted by the signal processor.

6 System performance and measurement parameters

6.1 General aspects

System performance indicates the performance of a weather radar system as a whole, rather than the performance of each unit comprising the radar.

System performance criteria are determined so that evaluation by these criteria can be applied to different types of weather radars, bringing a good user benefit as it makes it easy for users to write system specifications. On the other hand, adopting a standard set of criteria will lead to fair competition among manufacturers, as it will exclude radars with insufficient system performance from the global markets. For this purpose, criteria shall be measurable in a common way for all the weather radars before they will be shipped from factory.

Sensitivity, spatial resolution, accuracy of Doppler velocity, and accuracy of dual polarisation measurement are chosen as top criteria which show the system performance of weather radar most distinctively; these are called fundamental parameters.

Additionally, parameters are chosen, which are not included in fundamental parameters but are also very important in defining system performance; these are called other key parameters. Summarization is given in Tables 2 and 3. Clause 6.2 gives explanations of the fundamental parameters, while Clause 6.3 explains other key parameters. How to measure these values is given in Annex A. An example on how to record them is given in Annex C.

Table 2 — Fundamental parameters

Parameter category	Purpose	Value
Sensitivity	Determines how far or how weak of a radar echo that the radar can detect.	Reflectivity sensitivity *A* dBz at *B* km: The smaller *A* is for a distance *B*, the weaker the

Draft for Members' Review

© World Meteorological Organization, 2018

		echoes that the radar can observe or conversely, the farther the radar can observe the same echo
Spatial resolution	Determines the detail to which the radar can distinguish.	Beam resolution (in deg), range resolution (in m): The smaller the value is, the higher the detail that the radar can observe.
Precision of Doppler velocity	Determines the ability to remove ground clutter using Doppler filtering technique.	Phase stability (in deg): The smaller the value is, the greater the ability to remove ground echoes.
Accuracy of dual polarisation measurement	Determines the ability to observe weather echo types accurately with polarimetric parameters	Cross polarisation isolation (in dB): Reported as a negative value, the smaller the value, the better the system is able to separate the horizontal from the vertical signal.

Table 3 — Other key parameters

Parameter category	**Purpose**	**Value**
Antenna side lobe	Determines the faithfulness of the radar values due to strong off-axis echoes.	Gain difference (in dB) relative to the maximum gain at the center of the main lobe. Reported as a negative number, the lower the value, the less spurious energy observed by the radar.
Range side lobe	Relevant for pulse compression radars, determines the faithfulness of the radar values due to strong, out of resolution volume, but radially aligned echoes.	Gain (in dB) relative to peak power of the pulse. Reported as a negative number, the lower the value, the less energy from out of resolution volume echoes observed by the radar.
Maximum rotation speed	Determines how fast the radar antenna can rotate.	Maximum rotation speed (in rpm or deg/s):

Draft for Members' Review

© World Meteorological Organization, 2018

		The bigger the value is, the faster radar can scan.
Acceleration	Defines how quickly the antenna can change its speed.	Accelaration (in deg/s^2)
Antenna pointing accuracy	Determines the precision of the angular location of the data.	Antenna pointing accuracy (in deg): The smaller the value is, the more accurate and more precise.
Beam direction co-alignment	Determines how well the horizontal and vertical beams are aligned.	Alignment (in deg): The smaller the value is, the better aligned.
Beam width matching	Determines how well the horizontal and vertical beam widths match.	Matching (in deg): The smaller the value is, the better match.
Dynamic range	Determines the breadth of values that the radar can measure.	Dynamic range (in dB): The bigger the value is, the broader range of signals that the radar can detect.
Unwanted emissions	Determines the purity of the transmitted spectrum of the radar.	*A* dB at *B* MHz The smaller the value, the purer and cleaner the transmitted spectrum.

6.2 Fundamental parameters

6.2.1 Sensitivity

6.2.1.1 Definition

Sensitivity is defined as how far or how weak of a radar echo that the radar can detect. Setting *A* dBz as reflectivity of rainfall and *B* km as maximum distance to observe *A*, Sensitivity *A* dBz at *B* km is calculated as follows.

$$A = 10\log(C_0 C_{1\mathrm{F}}) + 20\log(B) \quad (3)$$

where

C_0 is a parameter determined regardless of system performance

$C_{1\mathrm{F}}$ is a parameter specific to each weather radar system, system loss included

NOTE A pulse compression radar has two constants $C_{1\mathrm{F}}$, one for the short pulse and one for the long pulse.

Draft for Members' Review

© World Meteorological Organization, 2018

Setting B, C_0, C_{1F} and A is calculated. The smaller A is for a distance B, the smaller echoes radar can observe. Parameters which define C_0, and C_{1F} in Table 4 (e.g. λ, SNR, S_{min}, P_t etc.) are described in the following clauses.

6.2.1.2 Derivation from radar equation

The sensitivity related to rainfall target is a measurement to see how far the rainfall target is observable.

If the received power scattered from the rainfall target is P_r and the radar reflectivity factor of rainfall target is Z, P_r is expressed as follows:

$$P_r = \frac{C \cdot Z}{r^2} \tag{4}$$

with (see e.g. [2])

$$C = \frac{P_t G_t G_r h \theta_H \theta_V \pi^3}{2^{10}(\log_e 2)\lambda^2} \left|\frac{\varepsilon - 1}{\varepsilon + 2}\right|^2 \tag{5}$$

and

$$Z = \int N_D D^6 \mathrm{d}D \tag{6}$$

where

P_t is the transmit power, in W

G_t, G_r is the antenna gain(transmit, receive)

h is the spatial pulse length defined as $c \cdot \tau$, in m

θ_H is the antenna beam width of horizontal plane, in rad

θ_V is the antenna beam width of vertical plane, in rad

λ is the wavelength, in m

ε is the complex permittivity of precipitation particle

D is the raindrop diameter, in m

N_D is the number of raindrops in unit volume, in $1/m^3$

r is the range to scatter, in m

C is the radar constant, in W/m [2]

NOTE For practical applications system losses have to be considered (see 6.2.1.4)

When P_r is at the minimum power level that can be detected, it can be expressed as S_{min} (see A.2.5). Substituting this S_{min} into Formula (4) allows to obtain the minimum radar reflectivity factor Z_{min} at any arbitrary distance r as follows:

Draft for Members' Review

© World Meteorological Organization, 2018

$$Z_{\min}(r) = \frac{S_{\min}}{C} r^2 \tag{7}$$

where

$Z_{\min}(r)$ is the sensitivity index of weather radar

If the items from the right side of Formula (7), which need not be measured for each radar unit, are placed as C_0 and, if the items which are specific to the radar device and need to be measured as C_1, the Formula (7) is expressed as follows:

$$Z_{\min}(r) = C_0 C_1 r^2 \tag{8}$$

C_0 includes the following items from the right side of Formula (7):

$$C_0 = \frac{2^{10}(log_{\mathrm{e}}2)\lambda^2}{\pi^3 \left|\frac{\varepsilon - 1}{\varepsilon + 2}\right|^2} \tag{9}$$

Similarly, as C_1 has P_{t}, G_{t}, G_{r}, h, θ_{H}, θ_{V} and $S_{\min}$ in Formula (7), it is expressed as follows:

$$C_1 = \frac{S_{\min}}{P_t G_t G_r h \theta_{\mathrm{H}} \theta_{\mathrm{V}}} \tag{10}$$

The value of C_0 is related to wavelength and temperature. Typical values of C_0 for each frequency band of S, C and X in 20 °C are shown in Table 4. The wavelength of S-band is 0,1 m, the wavelength of C-band is 0,057 m and the wavelength of X-band is 0,032 m.

Table 4 — Typical value of C_0 (Temperature 20 °C)

Items	S-band	C-band	X-band
λ(m)	0,1	0,057	0,032
$\left\|\frac{\varepsilon - 1}{\varepsilon + 2}\right\|^2$	0,928	0,928	0,927
C_0	0,2467	0,0801	0,0253

As the wavelength λ is normally set by the transmission frequency f_0 (MHz), it is calculated as follows using the speed of light as $3 \cdot 10^8$m/s:

$$\lambda = \frac{300}{f_0} \tag{11}$$

6.2.1.3 Basic Calculation

(mm^6/m^3) is used for the unit of radar reflectivity factor Z and is normally expressed by decibel as dBz. The common logarithm on both sides of Formula (8) is obtained considering this and it is multiplied by 10 as follows:

$$10\log(Z_{\min}(r)) = 10\log(C_0) + 10\log(C_1) + 20\log(r) + 180 \tag{12}$$

$10\log(C_1)$ is expanded from Formula (10) as follows:

Draft for Members' Review

© World Meteorological Organization, 2018

$$10\log(C_1) = 10\log(S_{\min}) - 10\log(P_t) - 10\log(G_t) - 10\log(G_r) - 10\log(h) - 10\log(\theta_H) - 10\log(\theta_V) \quad (13)$$

The units which are used for the items to be measured are shown below:

— Minimum Detectable Signal: $10\log(S_{\min})$, in dBm

— Transmit power: $10\log(P_t)$, in dBm

— Antenna gain: $10\log(G_t)$, $10\log(G_r)$, in dB

— Spatial pulse length: h, in m

The spatial pulse length is the value of pulse width τ (in s) multiplied by the speed of light. As the pulse width is normally measured in the unit of μs, the spatial pulse length is obtained as follows:

$$h = 300\tau_{(\mu s)} \quad (14)$$

— $\theta_{H/V}$, in rad

As the beam width is measured by degrees, it is converted into radian as follows:

$$\theta_{H/V} = \frac{\pi}{180 \cdot \theta_{H/V(\deg)}} \quad (15)$$

6.2.1.4 System loss and attenuation of radio wave

The radio wave is attenuated (power loss) during transmission in the actual operation. Therefore, it is necessary to consider the power loss caused by the radar component such as waveguide and the attenuation caused when the radio wave propagates in the space (due to air and rainfall). These loss and attenuation lead to deterioration of the Radar Sensitivity Index $Z_{\min}$ (increase). If the power loss generated by the radar component is F, F is included in C_1 because this element is specific to the radar device and which should be measured. Refer to A.2.8 for system loss to be measured.

This is calculated as C_{1F} and is obtained from Formula (13) as follows:

$$10\log(C_{1F}) = 10\log(S_{\min}) - 10\log(P_t) - 10\log(G_t) - 10\log(G_r) - 10\log(h) - 10\log(\theta_H) - 10\log(\theta_V) + 10\log(F) \quad (16)$$

In addition, letting the attenuation by atmosphere, water and vapour as L, L is the function of the propagation range r and the rainfall intensity R and is expressed as follows:

$$L(r, R) = 2\int_0^r (k_a + k_r R^{\alpha})\mathrm{d}r \quad (17)$$

where

k_a is the specific attenuation due to air, in dB/km

k_r, α is the specific attenuation due to rain, k_r in dB/km

R is the rainfall intensity, in mm/h

r is the range, in km

Draft for Members' Review

© World Meteorological Organization, 2018

If the rainfall intensity along the propagation path R is constant (R_0), only the distance is variable in Formula (17) and is expressed as follows:

$$L(\mathrm{r}) = 2(k_\mathrm{a} + k_\mathrm{r} R_0^{\alpha})r \tag{18}$$

to simplify the evaluation of sensitivity index during rainfall.

As the values of k_a, k_r, and α are different depending on the frequency used, set typical values for them according to each frequency band as shown in Table 5 for evaluation.

Table 5 — Specific attenuation due to air and rain (one-way, R in mm/h)

Frequency band	Specific attenuation due to air [a]	Specific attenuation due to rain [b]	
	k_a (dB/km)	k_r (dB/km)	α
S	0,00589	0,000343	0,97
C	0,00707	0,0018	1,05
X	0,008835	0,01	1,21

a see [3]
b CIMO Guide [1] Table 9.5 one-way specific attenuations at 18 °C

Lastly, using S_min as it is is insufficient. Usually a proper value of SNR (in dB) should be added. This value is to be decided by users. In case users cannot decide, 1 dB is used.

Based on the above, Formula (12) is practically expressed as follows:

$$10\log(Z_\mathrm{min}(r)) = 10\log(C_0) + 10\log(C_{1\mathrm{F}}) + 20\log(r) + L(r) + SNR + 180 \tag{19}$$

6.2.1.5 Pulse compression gain

In pulse compression radars, pulse compression gain G_c and pulse width τ_c after pulse compression processing are used for sensitivity index calculation of Formulas (13) and (14).

$$P_\mathrm{t} = P_\mathrm{t}' G_\mathrm{c} \tag{20}$$

$$10\log(P_\mathrm{t}) = 10\log(P_\mathrm{t}') + 10\log(G_\mathrm{c}) \tag{21}$$

Where P_t' is the original transmit peak power multiplied by pulse compression gain G_c, G_c becomes $10\log(bT)$ theoretically. (where b is the frequency modulation width and T is the transmission pulse width). h of Formula (14) is calculated using τ_c.

NOTE Pulse compression gain only applies to the long pulse.

6.2.2 Spatial resolution

6.2.2.1 Definition

Spatial resolution determines the detail to which the radar can distinguish.

As shown in Figure 7, it represents a sampling volume of the radar surrounded by $h/2$ (when h is spatial pulse length) and beam width. The smaller the sampling volume is, the higher the detail that the radar can observe.

Draft for Members' Review

© World Meteorological Organization, 2018

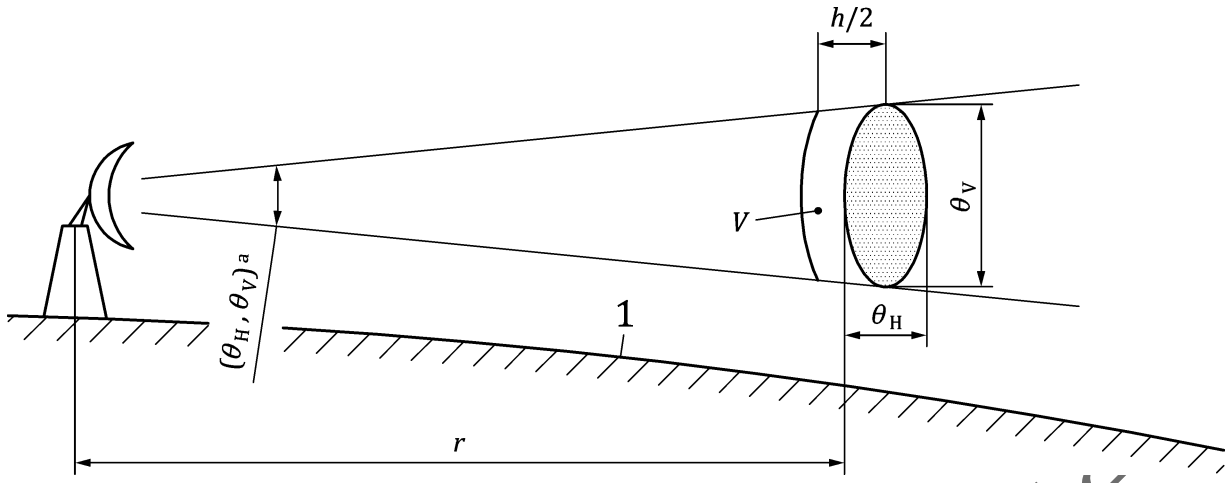

Key

1 Surface of the ground
h Pulse length
r Range
V Target volume
[a] Beam width

Figure 7 — Spatial resolution

Spatial resolution is decomposed into beam resolution and range resolution.

This system performance is evaluated in accordance with the table below:

Table 6 — System performance parameters

Category	**Parameter**	**Evaluation**
Beam resolution	θ_H: Antenna half power beam width of horizontal plane (in rad) θ_V: Antenna half power beam width of vertical plane (in rad)	The smaller, the better
Range resolution	ΔR_{pc}: for pulse compression radar (in m) ΔR_{np}: for non-pulse compression radar (in m)	The smaller, the better

6.2.2.2 Beam resolution

Beam resolution is determined from measurement of antenna main lobe. Main lobe is measured by half width (at 3 dB down point. See Figure 8) and shows how narrow the beam is around the centre of emission. Fine beam resolution is obtained when the main lobe half width is smaller. It should be noted that beam resolution is limited by the worst value between the transmit beam main lobe and the receiver's processing unit of angle.

Draft for Members' Review

© World Meteorological Organization, 2018

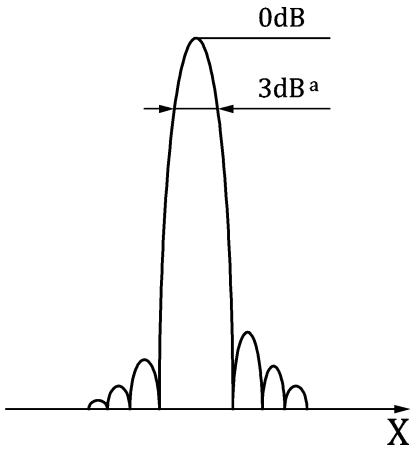

Key

a down point: beam width
X Horizontal/vertical angle

Figure 8 — Beam resolution

6.2.2.3 Range resolution

Range resolution is related to transmit pulse length, but is constrained by bottlenecks through the entire system, including receiver's characteristics such as bandwidth and sampling interval. These shall be considered to calculate range resolution rather than simply using the spatial length of transmit pulse.

Since a received signal is obtained as a discrete value for every sampling interval in case of digital receiver system, the pulse width at the 3 dB down point of the received power waveform is not monitored directly in the same way as transmit pulse width measurement.

Regarding this, pulse compression and non-pulse compression radars should be treated differently.

For non-pulse compression radar, range resolution should be estimated using a combination of bottleneck factors which limit resolution performance, namely, transmit pulse half power width, sampling time interval, and receiver bandwidth.

Range resolution is estimated as

$$\Delta R_{\mathrm{np}} = \max(L_1, L_2, L_3) \tag{22}$$

using resolution values L_1, L_2, L_3 calculated from bottleneck factors, corresponding to transmit pulse half width, sampling time interval, and receiver bandwidth, respectively.

As for the transmit pulse half width, L_1 is calculated with the measured transmit pulse half width τ_{t}.

$$L_1 = \frac{\mathrm{c}}{2}\tau_{\mathrm{t}} \tag{23}$$

where

τ_{t} is the transmit pulse half power width

Sampling time interval of received signal is the processing time interval t_{s} in the final stage of signal processor. Using a time interval t_{s}, L_2 is obtained as:

Draft for Members' Review

© World Meteorological Organization, 2018

$$L_2 = \frac{c}{2} t_s \tag{24}$$

Finally, from the receiver's bandwidth (3 dB down point from the peak), L_3 is calculated as follows:

$$L_3 = \frac{c}{2} \frac{1}{\Delta f} \tag{25}$$

where

Δf is the bandwidth of the receiver's BPF measured at the 3 dB down point from peak

In pulse compression radar, waveform shaping by raised cosine is conducted on transmit wave to prevent spectrum from widening. On the other hand, a windowing function is applied to the received wave to suppress range side lobe. With this waveform shaping, Gaussian approximation fits well the waveform after pulse compression. Figure 9 shows an example sampling pattern of the received signals.

Since sampling interval is generally not sufficiently small compared to pulse width, pulse width is estimated from the three sampling levels of the received signals corresponding to a transmit pulse peak and both sides of the 3dB down level of the pulse peak.

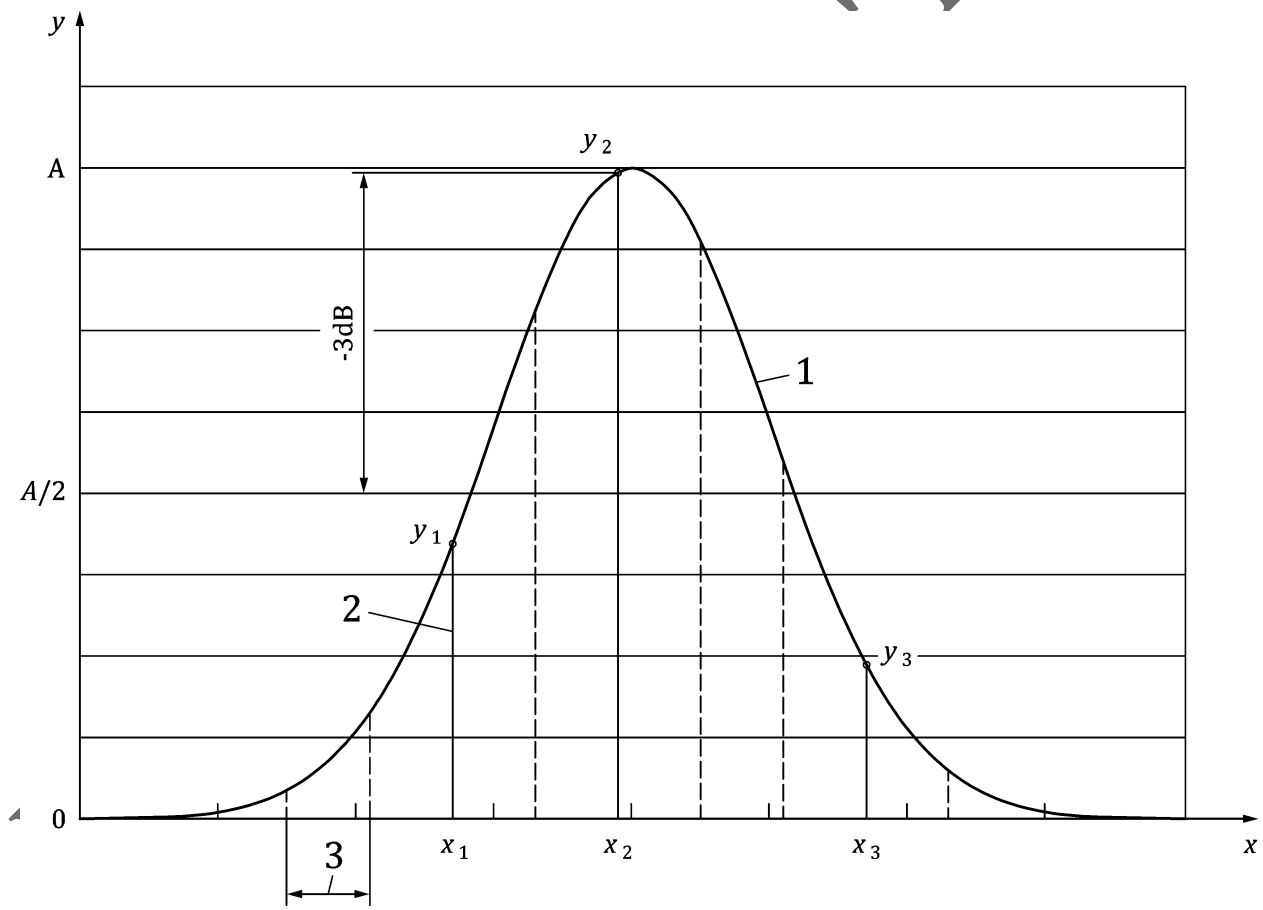

Key

1 Received pulse waveform after pulse compression
2 Sampling pulse
3 Sampling interval

Figure 9 — Received signal sampling waveform

© World Meteorological Organization, 2018

Letting time x as abscissa axis, A as maximum amplitude, μ as average value and σ^2 as variance, the received pulse waveform $y(x)$ is expressed with Formula (26).

$$y(x) = A \cdot e^{-\frac{(x-\mu)^2}{2\sigma^2}} \tag{26}$$

Pulse width is estimated by calculating A, μ and σ^2 with three measured values of (x_1,y_1), (x_2,y_2) and (x_3,y_3) which are sampled from the received pulse waveform. For increasing the precision of pulse width estimation, y_2 should be nearly the peak value and y_1 and y_3 should be lower than and nearest to the 3 dB down level from y_2.

The natural logarithm on both sides of Formula (26) becomes:

$$\ln\big(y(x)\big) = \ln(A) - \frac{(x-\mu)^2}{2\sigma^2} \tag{27}$$

The average value μ, the variance σ^2 and the maximum amplitude A are obtained as follows by substituting three measured values into Formula (27) and solving simultaneous formulas.

$$\mu = \frac{\ln\left(\frac{y_3}{y_2}\right)(x_1{}^2 - x_2{}^2) - \ln(\frac{y_2}{y_1})(x_2{}^2 - x_3{}^2)}{2(\ln\left(\frac{y_3}{y_2}\right)(x_1 - x_2) - \ln(\frac{y_2}{y_1})(x_2 - x_3)} \tag{28}$$

$$\sigma^2 = \frac{(x_1{}^2 - x_2{}^2) - 2\mu(x_1 - x_2)}{2\ln\left(\frac{y_2}{y_1}\right)} \tag{29}$$

$$A = y_1 \mathrm{e}^{\left(\frac{(x_1-\mu)^2}{2\sigma^2}\right)} \tag{30}$$

When pulse width is defined as the width of 3 dB down level from the maximum amplitude A, pulse width τ_{pc} is given as follows:

$$\tau_{\mathrm{pc}} = 2(x_3 - \mu)\sqrt{\frac{3}{10\log(A) - 10\log(y_3)}} \tag{31}$$

Range resolution of pulse compression radar is calculated using the estimated τ_{pc} above as

$$\Delta R_{\mathrm{pc}} = \frac{\mathrm{c}}{2}\tau_{\mathrm{pc}} \tag{32}$$

6.2.3 Phase stability

Radar system's Doppler velocity precision depends on the phase stability of transmit frequency and the stability of pulse repetition frequency. Phase noise degrades the radar system's Doppler observation capabilities and therefore affects ground echo clutter rejection and the estimation of the dual polarisation data. The STALO is usually considered the most dominant factor of phase instability [4] in systems with amplifiers (Klystron, Solid-state). Ideally, an oscillator generates a single frequency but as a matter of fact, instability is caused by random fluctuations of phase around the carrier. Phase noise is measured in units of dBc/Hz as the spectral power density of each 1Hz bandwidth, away from the carrier and referenced to the carrier frequency power.

Draft for Members' Review

© World Meteorological Organization, 2018

When $L(f)$ is this spectral density (expressed as antilogarithm) of 1 Hz bandwidth caused by random fluctuations, let θ_{ps} be defined as phase stability within a specified range $[a, b]$ in units of degrees, which is calculated as follows:

$$\theta_{\mathrm{ps}} = \frac{180}{\pi}\sqrt{2\int_a^b L(f)\mathrm{d}f} \tag{33}$$

where $\sqrt{2}$ means that phase stability should be calculated as double side band. As integral range, here we set $[a, b]$ to [100 Hz, 1 MHz] for calculation, considering typical f_{PRF} values for S/C/X-Band. Regarding frequency differences Δn, increase of phase noise when the frequency of the oscillator is multiplied by N, is expressed as follows:

$$\Delta n = 20\log_{10}N = 10\log_{10}N^2 \tag{34}$$

Since phase noise in terms of RMS is the square root of an integral value as antilogarithm, there is a proportional relationship between the oscillation frequency and phase noise in units of degree.

The above method intends to estimate the phase noise resulting from the stable local oscillator (STALO) only. In Magnetron radars a sample of every transmitted pulse is taken, and phase information from this sample is used in the receiver to measure the Doppler shift from successive pulses. This is called 'coherent-on-receive'. In these systems additional sources of phase noise need to be considered. A method which determines the phase stability of the full radar system is the use of an optical delay line. The delay line will generate the delay needed for the Doppler measurement. Other options like surface or bulk acoustic wave delay lines are suffering from high insertion losses reducing the signal-to-noise ratio. Moreover, the inherent delays are too short for long range measurements.

The optical delay line consists of an RF to optical and optical to RF converter with a fibre optic reel in between. The RF to optical transmitter consists of a continuous wave (CW) laser diode which is usually amplitude-modulated with the microwave signal. The optical to RF receiver converts the optical signal which travelled through the fibre optic reel back into an RF signal with the same characteristics but reduced amplitude. The length of the reel determines the delay of the received transmit pulse.

Using the existing signal processing hardware, the comparison of the transmit signal phase (transmit sample) with the received echo phase will show the inherent phase noise of the system. The system coherence will also be calculated by the signal processing unit of the radar receiver. This method cannot only be used for Magnetron radars, but it will provide an integral phase noise measurement also for Klystron or solid-state systems.

6.2.4 Accuracy of dual polarisation measurement

6.2.4.1 Dual polarisation

The accuracy requirements for dual-polarisation radars are higher than for conventional radars using a single polarisation only. Dual-polarisation products are based on differences between two polarisations and offsets between the two channels can produce large errors in retrieved quantities, e.g. estimated rain rate. For example, it is assumed that reflectivity factor can be estimated with an accuracy of about 1 dB, whereas for differential reflectivity (Z_{dr}) – the difference in reflectivity factor on linear horizontal and vertical polarisation – an accuracy of at least 0,2 dB is required [5].

6.2.4.2 Cross polarisation and port isolation

Cross Polarisation is the characteristic of an antenna to separate the horizontal from the vertical signal. The parameter is typically determined by the antenna manufacturer on a far field test stand.

Draft for Members' Review

© World Meteorological Organization, 2018

Port isolation describes the capability of the radar system to separate the horizontal from the vertical signals after reception by the antenna system. This parameter can be determined easily for single radar components like the rotary joints or the waveguide switch. However, to estimate the integral port isolation for all contributing components is technically very complex. But since in current radar systems the port isolation is several orders of magnitude lower than the cross polarisation this parameter is of lower relevance in the system performance context.

6.3 Other key parameters

6.3.1 Side lobe

As for side lobes, suppression level of antenna side lobe and range side lobe should be measured. The former determines the faithfulness of the radar values due to strong off-axis echoes. The latter is relevant for pulse compression radars, determines the faithfulness of the radar values due to strong, out of resolution volume, but radially aligned echoes.

6.3.2 Beam direction co-alignment

This parameter is defined as the difference in degree between the peaks of the horizontal and the vertical co-polarized antenna diagrams. It is a measure to compare the beam direction of the horizontal and the vertical beam.

6.3.3 Beam width matching

This parameter is defined as the difference in degrees between the horizontal and the vertical co-polarized antenna diagrams at a given level (-3 dB, -10 dB). It is a measure to compare the symmetry of the radiated volume by the horizontal and the vertical beam.

6.3.4 Maximum rotation speed

This parameter is related to how fast the antenna can rotate. The bigger the value is, the faster radar can perform scanning.

6.3.5 Acceleration

This parameter defines how quickly the antenna can change its speed. As measuring of absolute acceleration properly in units of deg/s^2 is complicated, this document defines as an alternative the time the antenna takes to stop completely in both AZ/EL directions when in full motion.

The acceleration value alone does not completely describe how fast and precisely the antenna can change elevation and azimuth position. This is called step response time, which is not further discussed in this document. This parameter defines the time needed to step the antenna from one position to another within a given accuracy window to allow for settling. An important application is the stepping from one elevation to the next during a volume scan.

6.3.6 Antenna pointing accuracy

Antenna pointing accuracy addresses different aspects:

— the ability of the positioner unit to steer the antenna dish with a defined precision to a given azimuth and elevation angle in relation to a mechanical reference point on the positioner unit

— the ability of the system to point to the same given position repeatedly over a long time (months, years)

— the precise alignment of the internal (hardware) azimuth/elevation reference to the local geographical orientation to relate the measured data to a position on the earth

Draft for Members' Review

© World Meteorological Organization, 2018

— the alignment of the beam in both polarisations (if applicable) to the focus point of the antenna.

There are many influences on the pointing accuracy like the type of positioning system (gears, belt), the mechanical installation at the site (levelling), the structure of the tower (steel, concrete), the north alignment, the assembly of the dish and feed horn.

The geographical alignment of the antenna and its stability over a long time can be verified and monitored with software tools of the radar manufacturers which use the electromagnetic signal of the sun as a position reference. Pre-requisite for this kind of measurement is the availability of the precise geographical position of the radar system and the correct time since both will be used to estimate the reference position of the sun. Details on the recommended frequency of antenna pointing checks with the sun are given in Annex D.

Because of difficulties of obtaining absolute pointing accuracy inside a factory, a feasible way is to measure pointing accuracy in terms of repeatability in a factory, followed by sun checking on site. Repeatability checks the antenna capabilities to point a same direction after continuous movement.

6.3.7 Dynamic range

Dynamic range LV_{d} is the ratio of the maximum to minimum signal strength that the radar receiver can measure. It is the difference in dB, of the receiver output between the minimum detectable signal ($S_{\min}$) and where the receiver amplifier saturates. Saturation can also occur in the digital domain due to overflow. Measurement or calculation of $S_{\min}$ will be described in A.2.5. Defining the maximum signal can be done by using the compression point of a receiver. Very common is the 1 dB compression point for the characterization of receivers. It is the point where the receiver gain is reduced by 1 dB due to compression. When the amplifier is operating in the linear region an increase of input signal by 3 dB will result in an increase of output signal by 3 dB.

For the measurement it is recommended to use an external and highly stable signal generator. The output power range of the signal generator shall span the expected dynamic range of the receiver. The dynamic range should be measured over the complete receiver chain from the input of the receiver, which is usually at the waveguide to coaxial transition. This includes the analog and digital signal processing. The complete receiver chain includes the low noise front end, downconverters, filters and A/D converter and digital signal processing.

6.3.8 Unwanted emissions

The level of unwanted emissions describes the purity of the transmitted spectrum of the radar (see Figure 10). The expression *A* dB at *B* MHz shows *A* dB is decreased from the peak spectrum value at a point *B* MHz away from the central frequency. The bigger the value *A* is, the more radars can operate in the same band due to narrow frequency bandwidth.

Limits for the unwanted emissions are specified by several national and international standards like e.g. CEPT ERC Rec (02)05 (2012) CEPT ERC Rec 74-01E (2011), ITU-R SM.329-12, ITU-R SM.1541-6.

Draft for Members' Review

© World Meteorological Organization, 2018

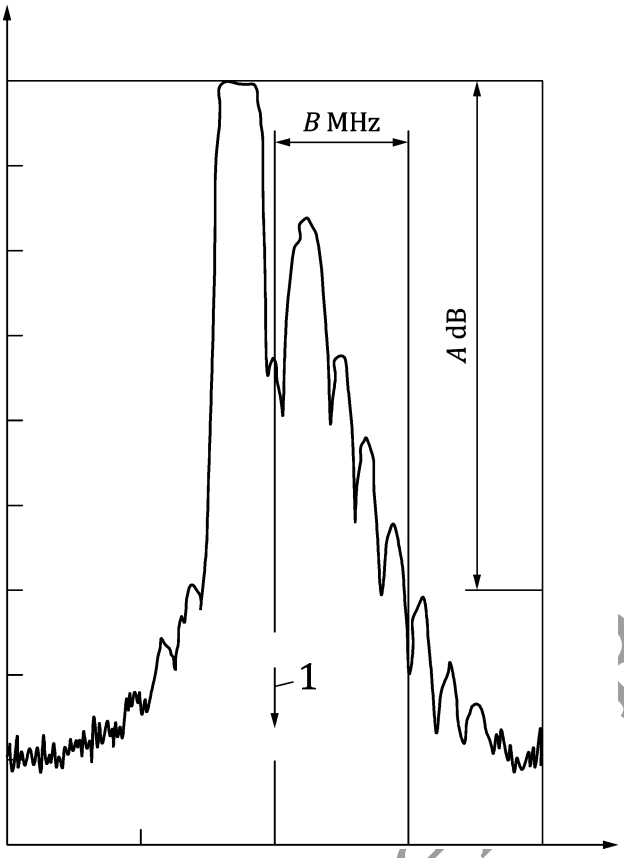

Key

1 Center frequency

Figure 10 — Unwanted emissions

7 Calibration, monitoring and maintenance

7.1 General aspects

The terms calibration, maintenance and monitoring are related to each other and often it is not easy to distinguish clearly between them. During calibration (Clause 7.2) the performance of the radar system is characterized in order to provide radar data with high accuracy, i.e. estimate reflectivity with an accuracy better than 1 dB. Maintenance (Clause 7.4) is performed to replace broken parts of a radar (Clause 7.4.3), preventive maintenance (Clause 7.4.2) will ensure the performance of the radar and will extend the time between failures. After replacing parts of the radar, often a calibration is necessary. Monitoring (Clause 7.3) describes a process which ensures high data quality of the radar. Often, during monitoring decisions on intermediate maintenance or calibration are made.

Calibration and maintenance are performed on regular intervals as described below. In most cases maintenance of radar hardware has to be performed on-site, software maintenance could be done from remote, whereas calibration can be performed on-site (e.g. if hardware settings have to be adjusted or special equipment is involved) or from remote (e.g. if calibration constants are adjusted). Monitoring should be performed at least on a daily basis; therefore, monitoring will be from remote for unmanned sites. Monitoring is performed during normal operation; no interruption of radar operation is necessary.

The calibration and maintenance of any radar should follow the manufacturer's prescribed procedures. The following is an outline.

Draft for Member Review

© World Meteorological Organization, 2018

7.2 Calibration

Regular calibration is crucial for a good system performance.

7.2.1 Types of calibration

Ideally, the complete calibration of reflectivity uses an external target of known radar reflectivity factor, such as a metal-coated sphere. The concept is to check if the antenna and wave guides have their nominal characteristics. However, this method is very rarely used because of the practical difficulties in flying a sphere and multiple ground reflections. Antenna parameters can also be verified by sun flux measurements. Routine calibration ignores the antenna but includes the wave guide and transmitter receiver system. Typically, the following actions are prescribed:

— Measurement of emitted power and waveform in the proper frequency band;

— Measurement of transmission losses and receiver losses;

— Verification of transmitted frequency and frequency spectrum;

— Injection of a known microwave signal before the receiver stage, in order to assign a reference power to a given analog digital converter (ADC) count;

— Measurement of the signal to noise ratio, which should be within the nominal range according to radar specifications.

If any of these calibration checks indicate any changes or biases, corrective adjustments need to be made. Doppler calibration includes: the verification and adjustment of phase stability using fixed targets or artificial signals; the scaling of the real and imaginary parts of the complex video; and the testing of the signal processor with known artificially generated signals.

Although modern radars are usually equipped with very stable electronic components, calibrations shall be performed often enough to guarantee the reliability and accuracy of the data. Calibration shall be carried out either by qualified personnel, or by automatic techniques such as online diagnostic and test equipment. In the first case, which requires manpower, calibration should optimally be conducted at least once per year; in the second, it may be performed daily or even semi-continuously. Simple comparative checks on echo strength and location can be made frequently, using two or more overlapping radars viewing an appropriate target.

Radar systems need to be calibrated regularly to ensure constantly high measurement accuracy. This involves the calibration of various parameters at different time intervals. The radar constant C should be measured with an accuracy of ± 1 dB. The error in the radar reflectivity factors is larger, since in addition to the radar constants this includes further parameters (e.g. atmospheric attenuation). The table in Annex D summarises the parameters to be measured, the methods used in practice and the required calibration frequency.

7.2.2 Items, procedures and intervals of calibration

The suggested frequencies in Annex D are indicative values only. Users should follow the manufacturer's instructions.

7.3 Monitoring

7.3.1 General

Monitoring describes procedures to monitor the state, functionality, and data quality of a radar system. It should be done on a regular basis, at least daily based on the instructions and recommended procedures given by the manufacturer. For unmanned radar sites monitoring is performed from remote

Draft for Members' Review

© World Meteorological Organization, 2018

central offices. Inconsistencies discovered during monitoring can lead to intermediate maintenance or calibration or other actions described by the manufacturer.

Monitoring of the radar system has a considerable influence on radar data quality and therefore radar data application like QPE and data assimilation. The monitoring of data quality will be included in ISO 19926-2 (under preparation).

Depending on the hard- and software of the radar various parameters of the system can be monitored automatically or manually. Automatic monitoring would release some text messages to service personnel. Manual monitoring is done on a regular basis by service personnel for technical performance or by a meteorologist for radar products like reflectivity, rain rate or Doppler velocity (for radar data exchange, see Annex E). A simple monitoring of the functionality of a weather radar would be a frequent look to uncorrected radar images and verify the strength and location of ground clutter targets. Sudden changes would indicate failures of receiver or transmitter or pointing direction adjustment of the antenna. Even a simple comparison of radar-derived rain rate to a nearby rain gauge could give indications on the functionality of a weather radar. Regarding polarimetric radar, monitoring the max. ρ_{HV} in light stratiform rain during the normal operation of the radar gives a good indication of the overall quality and condition of the system.

Several items described above in Clauses 7.2 and 7.3 can be considered as monitoring. Especially those items, which are recommended for daily or even more frequent checks, can be considered as monitoring as long as automatic procedures would raise an alarm as soon as parameters deviate from predefined values. Calibration checks with the sun (Clause 7.3.3) can monitor the receiver stability and pointing accuracy in case the data evaluation is performed in real-time and transmitted to the remote central office. A build-in test-equipment (BITE) can monitor a huge number of technical parameters and will raise alarms in case the parameters are outside predefined boundaries. BITE can also monitor external devices like air-condition or uninterrupted power supply. BITE alarms should be send automatically as text message to service personnel.

Besides radome attenuation up to several dB has to be considered in situations where heavy rain or snowfall leads to water, ice or melting ice cover on the radome, it has to be mentioned that aging of the radome can increase the time until water or ice cover runs off. This can be improved by hydrophobic coating of the radome. Fissures in the radome can lead to water sucking of the radome and thus increased losses. A regularly cleaning and inspection of the surface of the radome is recommended.

7.3.2 Stability of radar system

With the benefit of today's modern radar technology (e.g. low noise amplifiers (LNA), fast and accurate A/D converter) and with careful and regular calibration, it is possible to achieve high system stability: intrinsic uncertainties associated with the radar system itself are smaller than the uncertainties associated with the intrinsic variability of reflectivity of the radar target.

For quantitative radar applications, high stability and accurate calibration are mandatory. Monitoring the stability of just the receiver chain or transmitter chain (one-way) is simpler than monitoring the stability of the entire radar system (two-way).

To monitor the stability of the receiver chain, a reference power signal (instead of the received power coming from the antenna), is injected into the LNA input of the receiver and exactly that value (± a given uncertainty) is used for linking the given analog-to-digital-unit value at the output of the digital receiver to the reference power value. No measurement is made of the power backscattered by a given object at a given distance, it is simply known that a given power on a logarithmic scale (dBm) corresponds to a given Log-transformed analog-to-digital-unit. In the case of an antenna-mounted receiver, an effective solution uses a noise source as the reference signal, taking advantage of its high temperature stability [6].

Monitoring the entire system's stability requires the assessment of losses (receive and transmit chains including waveguide, rotary joint, couplers, cables, radome, etcetera), antenna gain, and the accuracy of

Draft for Members' Review

© World Meteorological Organization, 2018

the antenna pointing angle. Assuring the stability of the entire system requires the calibration of the radar system against some known reference target (e.g. a metal sphere, a corner reflector with certified radar cross section) at various distances from the sensor itself. However, passive scatterers, like large spheres or corner reflectors, are difficult to deal with, especially in heavy-cluttered mountainous terrain.

There are two ways to overcome this difficulty:

— Total system stability (two-way) are occasionally [7;8] or continuously [9;10] checked using active calibrators.

— The problem is split into two simpler complementary parts:

  — An external receiver is used as a one-way passive calibrator for checking the transmit chain (e.g. [7;11]

  — The sun is used for calibrating [12] and checking [13;14] the receive chain.

Results from the latter method were derived using data acquired in 2008 [13;14], a period of quiet solar flux activity. More recently, it has been shown this method is also practicable during more active solar periods [15;16]. The use of the sun is optimal in terms of cost/benefit. Solar monitoring can be carried out continuously.

In the event that regular monitoring indicates change in stability the user should consult with the manufacturer's instructions for guidance on corrective action.

7.3.3 Monitoring receiver stability and electrical pointing using the sun

7.3.3.1 General remarks

The sun is a known source of microwave energy, and it can be used to check and monitor several aspects of a weather radar operation. These checks can be performed as separate tasks between the operational scans or during the radar maintenance, or the sun observations during the normal operational scans can be used.

Please refer to the system manuals for detailed instructions on how the tests are performed in individual radars.

7.3.3.2 Antenna pointing accuracy

The position of the sun at any given time is well known. The microwave signal from the sun can be used to verify and calibrate the pointing accuracy of the radar antenna in both azimuth and elevation. Typically, this is done by performing a sector scan around the sun and calculating the offset in both azimuth and elevation using the known position of the sun and the angle information from the radar antenna control. (For elevation offset the refraction at low elevation angles has to be taken into account.) Most weather radar systems have an automated procedure for this. Also, methods for calculating the offsets using the sun “hits” during normal operational scans have been developed.

Using the solar radiation to monitor the antenna pointing accuracy of course requires that the time in the radar control system is accurately synchronized.

Sector scans around the sun can also give an estimate on the antenna gain and beam width.

7.3.3.3 Receiver stability

The condition of the radar receiver chain can also be monitored using the microwave signal from the sun. It has to be noted, however, that the solar flux fluctuates a lot over time. Reference values for the solar flux can be retrieved from solar observatories.

Draft for Members' Review

© World Meteorological Organization, 2018

In the case of dual polarisation radars the sun signal can be seen in both receiver channels. The horizontal and vertical signals should have the same magnitude but be uncorrelated (ρ_{HV} close to 0) since the sun is an unpolarised source.

7.4 Maintenance

7.4.1 General aspects

Radar maintenance, which is essential to ensure correct and ongoing radar operation, requires highly skilled human resources and significant financial resources for staff travel, test equipment and appropriate spares.

Radar maintenance also requires the availability of detailed, manufacturer-provided maintenance manuals and documentation.

Modern radars, if properly installed and operated, should not be subject to frequent failures. Some manufacturers claim that their radars have an overall mean time between (major) failures (MTBF) of the order of a year. However, these claims are often optimistic and the realization of the MTBF requires scheduled preventive maintenance. A routine maintenance plan and sufficient technical staff are necessary in order to minimize repair time.

Competent maintenance organization should result in radar availability 96 % of the time on a yearly basis, with standard equipment. Better performances are possible at a higher cost.

In order to avoid maintenance-related shutdowns during critical weather conditions, this is coordinated in advance with the weather forecast. Normally maintenance lasts only a few hours.

7.4.2 Preventive maintenance

Preventive maintenance should include at least a monthly check of all radar parts subject to wear, such as gears, motors, fans and infrastructures. The results of the checks should be written in a radar logbook by local maintenance staff and, when appropriate, sent to the central maintenance facility. When there are many radars, there might be a centralized logistic supply and a repair workshop. The latter receives failed parts from the radars, repairs them and passes them on to logistics for storage as stock parts, to be used as needed in the field.

7.4.3 Corrective maintenance

For corrective maintenance, the service should be sufficiently equipped with the following:

— Spare parts for all of the most sensitive components, such as tubes, solid-state components, boards, chassis, motors, gears, power supplies, and so forth. Experience shows that it is desirable to have up to 30 % of the initial radar investment in critical spare parts on the site. If there are many radars, this percentage can be lowered, with a suitable distribution between central and local maintenance;

— Test equipment, including the calibration equipment mentioned above. Typically, this would amount to up to 15 % of the radar purchase price;

Well-trained personnel capable of identifying problems and making repairs rapidly and efficiently.

7.4.4 Maintenance options

Weather radar systems shall be at least equipped with the following maintenance options:

— remote access;

— on/off switch (reset);

Draft for Members' Review

© World Meteorological Organization, 2018

— test with reference signals;

— software/firmware upgrades;

— antenna pointing adjustment;

— fault and status diagnosis.

Some maintenance tasks can be performed remotely (reliable connection required), others require an onsite visit.

7.4.5 Maintenance items and intervals

Maintenance methods and procedures vary with radar manufacturer. Nevertheless, manufacturers often use similar maintenance items and measuring instruments.

First and foremost, this involves regularly repeated checking, of parameter calibrations provided by the manufacturer. Parameters deviating from the reference value are to be re-calibrated.

Test results, such as transmitted power or dynamic range, should be within tolerance to maintain high quality data. However, it is difficult to define clearly these tolerance values because they depend on the purpose of the observation and the system configuration.

Recommended minimum equipment for calibration and maintenance includes the following:

— Microwave signal generator;

— Microwave power meter and/or power sensor;

— MHz oscilloscope;

— Microwave frequency counter and/or spectrum analyser;

— Microwave components, including loads, couplers, attenuators, connectors, cables, adapters, and so on;

— Standard electrical and mechanical tools and equipment;

— Diode Detector and 3 dB attenuator for pulse width measurements.

An example of each item with the corresponding maintenance intervals for the radar system is shown in Annex D. Since some of those devices are used to calibrate the radar they shall be calibrated themselves in regular intervals.

Maintenance encompasses not only the radar system itself, but also other technical units vital for its operation (e.g. ventilation, uninterrupted power supply and air-conditioning). Their maintenance interval may differ from that of the radar system itself. The hardware associated with the software used in control systems, the service and product generation also undergo regular checks. These take place every two years. In addition, maintaining the inventory of suitable spare parts at the radar site and in a central warehouse are also important contributors to continuous availability.

7.5 Life-cycle management

7.5.1 Spare-parts strategy

The high data availability requirement of a weather radar requires 24/7 operation without long breaks for time consuming maintenance or failures in the system. To ensure the high availability it is a good policy to store critical spare parts at the radar site or at the operator's warehouse, where they can be

Draft for Members' Review

© World Meteorological Organization, 2018

quickly deployed in case of a failure. These spare parts can include e.g. the critical parts of the radar transmitter, receiver, antenna drive system, electric power, communication interfaces, etc.

Please refer to the manufacturer's documentation for a detailed list of recommended spare parts.

Less critical spare parts can be ordered on demand from the manufacturer. Many manufacturers offer service contracts or express spare part services to ensure swift delivery of the factory spares also.

The manufacturer shall be able to deliver a complete list of all the spare parts in the system with delivery times.

7.5.2 System availability

System availability should be defined as the percentage that the system operates satisfactorily over a certain period of the time including time used for scheduled preventive maintenance and corrective maintenance, and is defined in Formula (35):

$$System\ availabiliy = \frac{(MTBF \cdot NF)}{(MTBF + MSRT) \cdot NF + TTPM} \cdot 100\% \qquad (35)$$

where

NF is the total number of "Failures" during the system operating period; "Failure" is defined as loss of functionality whereby the System is unable to fulfil the system requirements. Therefore, even if a functional failure occurs on a certain unit, as long as the system fulfils the system requirements because of such as redundancy, it does not correspond to the "Failure".

MTBF is the Mean Time Between Failure; defined as the total measured operating time divided by the total number of Failures (NF) of the system.

MSRT is the Mean Service Restoration Time

TTPM is the Total Time for Preventive Maintenance; defined as the total time of scheduled preventive maintenance time during the system operating period.

The *MSRT* is defined in Formula (36):

$$MSRT = MTTR + MRT \qquad (36)$$

where

MTTR is the Mean Time To Repair; defined as the total measured repair time divided by the total number of Failures (NF) of the System provided that the necessary replacement parts are available on site.

MRT is the Mean Response Time; defined as the mean time required, starting from the incident of Failure, for a technician to be ready to commence a repair action. If needed spare parts are not in the radar site, the time for transportation from the central warehouse or manufacturer should be included in the MRT. Holding suitable spare parts and keeping an inventory of them are also important for high availability.

Conceptual image of each parameter is shown in Figure 11.

Draft for Members' Review

© World Meteorological Organization, 2018

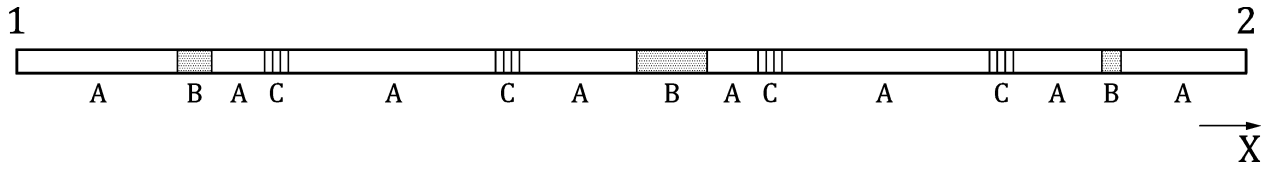

Key

1 Starting operation
2 End of operation
A Normal operation time
B Service restoration time for failures
C Scheduled preventive maintenance time
X Time

Figure 11 — Example for calculation of system availability criteria

7.5.3 Life-cycle costs

A Doppler radar is a complex tool that is able to detect an object, determine its position, the radial component of its velocity at a given time. A Doppler weather radar is a very complex but unique tool, which is able to get real time overview on the current precipitation fields: it clearly shows where and when something is happening; however, to precisely describe what is happening and to accurately quantify the precipitation rate is by far more difficult. With these premises, it is not surprising that the general recommendation of this document regarding needed man power is that the ratio between Full Time Equivalent (FTE) of radar engineers/scientists and the number of radars in the network shall be larger than 1. Weather radar life-cycle costs also include spare parts costs and basic operation maintainance costs.

8 Staff, competencies and training

The selection, design, operation, maintenance and use of a weather radar network requires a broad understanding of the technology, its limitations and an understanding of the application requirements.

Design of the radar network and selection of the radar technology requires trade-off studies and take into account the wild variety user applications. The users of the radar data and products will require knowledge of end-user applications and mesoscale meteorology. As experience and knowledge of the radar capabilities evolve, additional development to exploit for a sustainable and enhanced weather services.

Radar utilizes high power transmitters, very sensitive receivers, sophisticated signal processing, heavy rotating pedestals and antennas and self-monitoring tools. The radar site is most often located as a standalone remote facility with heating/cooling equipment, shelters, telecommunications, auxiliary power facilities and site maintenance issues. The radar requires calibration and maintenance to produce reliable measurements. Small changes in calibration and interpretation can significantly impact the outcomes. Quality management requires monitoring and recording system changes.

Hence, there are a wide range of competencies to operate and use a radar and radar network and including scientific, meteorological, technical and logistical skills. These competencies are shown in Table 7.

Table 7 — Staff, competencies and training

Project Leadership and Management	The organization shall “own” the project and understanding of the overall goals and ability to lead, manage the end to end project is critical.

Draft for Members' Review

© World Meteorological Organization, 2018

	The overall approach, the negotiations for and management of funds, the leadership of people and contracts is required. Many competencies can be provided in creative ways, by teams, by external consultants or others but project ownership shall reside within the organization. Education/Experience: Leadership, Project Management skills
Scientific and meteorological	Strategic planning is required to specify the service, the service level, to design the radar network and applications. This is needed at the beginning of the project and could be provided by consultants working closely with the NMHS. Specific Competencies: — Understand organizations strategic plan and envisioned service and service levels, — Understanding of weather (climatology's of precipitation intensity, height of relevant weather systems, characteristics of the severe weather) in the coverage area — Basic understanding of user or application requirements (bias, accuracy, data quality) — Basic understanding of radar technologies (attenuation, beam width, scan strategy, ground clutter mitigation) and trade-offs Education/Experience (of the team): Meso-meteorological and hydrological knowledge (mesoscale meteorology, distributed water shed); understanding of application of radar technology; strategic direction of NMHS; can perform requirements analysis; scientific knowledge of radar limitations.
Scientific and Engineering	Technical Support is required to convert the user specifications into technical specifications and for technical and process planning. This can be a team of people or provided with consultants working with NMHS and system designers. — Understand radar technology and trade-offs — Understand impact on service and application levels — Understand organizational competencies (project management, technical capacity) — Understand safety, licensing and construction practices Education/Experience: Industrial, electro-mechanical engineering for planning; radar hardware knowledge; organizational knowledge; quality management design principles
Technical – Support and Maintenance	Ongoing maintenance, calibration and support is required. This may be contracted out but could be fraught with problems (competency with radar can be difficult to find). — General knowledge and practice of occupational safety procedures when working with high power systems and

Draft for Members' Review

© World Meteorological Organization, 2018

	heavy machinery. — General understanding of electronics (need to operate voltmeters, signal generators, oscilloscopes, spectrum analysers) — Comfortable working with computers, setting up networks, backing up data and computers. — General knowledge of site maintenance (road repair, diesel and UPS power systems, air conditioners, heating systems) — Basic knowledge of high power systems, heavy machinery, electronic components at line replacement unit level, telecommunications — Diagnostic and analytical skills. — Quality Management culture. — Basic knowledge of radar applications. Education/Experience: Advanced technical skills with high power electrical RF systems, electronic and computer systems, and heavy mechanical systems. Knowledge of auxiliary power systems and general site maintenance.
Quality Management	Roles are to manage radar equipment quality, the radar network operations and maintenance including engineering (maintenance, testing, sparing planning) and scientific (hardware diagnostic support) support, metadata management, archiving, radar and processing system monitoring and updating. Education/Experience: (Team and Variety of skills needed). Basic technical skills to monitor and diagnose operational systems, report system changes. Computer technology skills for archiving and retrieving metadata and data. Computer software and system installation skills for updating radar processing and hardware systems.
Meteorological and/or Application Developer and Research	Role is to optimize the use of radar data and integrate into forecast systems, training end-users. This includes quality management of the radar system. This can be a wide-ranging group of people ("local guru") and could be developed over time. — Training and products may initially be done by radar manufacturer software. — Experience with technology will result in continual capacity building which is best done in-house. — Maturity with technology can result in increased or enhanced requirements and require changes in the radar or product generation configuration or in the data sharing. — Broad knowledge of radar applications; knowledge of cloud physics, meso-scale meteorology, precipitation

Draft for Members' Review

© World Meteorological Organization, 2018

	measurements, hydrological application. — Application development is open ended – from commercial services, data exchange, software applications for radar, integrated observing system, forecasting, product improvement and enhancement. Education/Experience: Knowledge of end user application, scientific/software application development, including integration into forecast or other application systems.

Operators of radars will also support other monitoring technologies and the World Meteorological Organization is developing comprehensive competencies over a range of technologies.

9 Siting and installation

9.1 General aspects

Information on effects reducing the quality of precipitation measurement by radar, their detection as well as counter measures like post processing of radar data will be treated in Part 2 of this document.

9.2 Selection and preparation of a radar site

The choice of the site for a radar system depends on the planned application.

In the case of a radar network intended primarily for synoptic applications, radars at mid-latitudes should be located at a distance of approximately 150 km to 200 km from each other. If the radar network is used for quantitative rainfall measurements, where it is paramount to use radar beams at low height, that distance should not exceed 100 km. The distance can be increased at latitudes closer to the equator, if the radar echoes of interest frequently reach high altitudes. In all cases, narrow-beam radars will yield the best accuracy for precipitation measurements.

When there is a definite zone that requires storm warnings, the best compromise is usually to locate the equipment at a distance of between 20 km and 50 km from the area of interest, and generally upwind of it according to the main storm track. It is recommended that the radar be installed slightly away from the main storm track in order to avoid measurement problems when the storms pass over the radar. At the same time, this should lead to good resolution over the area of interest and permit better advance warning of the coming storms [17].

Radar sites on high mountains are of little benefit for detecting precipitation near the ground. Measurements with negative elevation produce strong ground echoes, hence they make sense only in exceptional cases. In mountainous regions, therefore, it is mostly impossible to achieve a trade-off between good visibility range and near-ground measurements. Here, the auxiliary positioning of smaller systems in large mountain valleys can play a valuable supplementary role.

The choice of radar site is also influenced by many economic and technical factors as follows:

— The existence of roads for reaching the radar;

— The availability of power and telecommunication links. It is frequently necessary to add commercially available lightning protection devices; the installation of lightning rods should be carefully designed, as the antenna performance (in particular the side lobes attenuation) can be seriously impacted when the radar beam intercepts such rods;

— The cost of land;

— The proximity to a monitoring and maintenance facility;

Draft for Members' Review

© World Meteorological Organization, 2018

— The existence of as few obstacles as possible for the radar beam, in order to maximize the radar visibility and minimize the amount of ground clutter and beam blockage. No obstacle should be present at an angle greater than a half beam width above the horizon, or with a horizontal width greater than a half beam width. This applies to the immediate vicinity and also for longer distances. In the case of small-scale applications, special attention should be paid to avoiding ground echoes in the target area. In large-scale applications, in contrast, unrestricted visibility is the top priority. Simulation software can be used to assess the quality of a radar site candidate with respect to ground clutter and blockage. The input of such software is a detailed terrain elevation model (including if possible anthropic obstacles) and the characteristics of the antenna and the radar pulse: height above ground of the feed horn, pulse frequency, antenna gain, 3dB beam width, pulse power, antenna elevation;

— The obstacles environment of a radar site is subject to evolution: new buildings, trees growing… The radar operator has often legal means to limit in the future the increase of the amount of obstacles and their sizes, and should use them to their full extent;

— For a radar to be used for applications at relatively short range, it is sometimes possible to find, after a careful site inspection and examination of detailed topographic maps, a relatively flat area in a shallow depression, the edges of which would serve as a natural clutter fence for the antenna pattern side lobes with minimum blockage of the main beam. In all cases, the site survey should include a camera and optical theodolite check for potential obstacles. In certain cases, it is useful to employ a mobile radar system for confirming the suitability of the site [18];

— When the radar is required for long-range surveillance, as can be the case for tropical cyclones or other applications on the coast, it will usually be placed on a hill-top. It will see a great deal of clutter, which may not be so important at long-range surveillance.

Every survey on potential sites should include a careful check for electromagnetic interference, in order to avoid as much as possible interference with other communication systems such as television, microwave links or other radars. There should also be confirmation that microwave radiation does not constitute a health hazard to populations living near the proposed radar site [17;19). In most cases, there are legal regulations about these topics to be followed. To avoid interferences, emission and/or reception filters may have to be installed on the waveguide, they introduce an additional attenuation for the signal.

It can even be necessary to operate the radar without emission in a particular angular sector ("sector blanking"), so as to not exceed the legal exposure to microwaves. The sector blanking function of the radar shall be monitored by a dedicated safety control system complying with national regulations and requirements. The safety control system would interrupt the transmitter if it unintentionally tries to transmit into the sector.

9.3 Supporting infrastructure

Supporting infrastructure for a weather radar site can include:

— a radar tower (which might need to be constructed);

— electrical power supply;

— data transmission facilities (approx. 8 Mbps for a dual polarization radar);

— controlled environment in operators' room (humidity and temperature);

— uninterrupted power supply (UPS) (size and required available support time and a generator);

— accessibility (where unmanned operation is required, the equipment shall be of higher quality).

Draft for Members' Review

© World Meteorological Organization, 2018

A radar tower of significant height can be necessary to overcome too much beam blockage and ground clutter in the close vicinity of the radar. Horizontality of the radar plane reference should be maintained even in case of strong winds.

A continuous power supply is needed for a radar whose data is expected to be available at all time. If the radar site is isolated, it may not be enough to rely on the power grid, and an electric generator with an UPS is then necessary.

Air conditioning in the electronic cabinets room is most of the time necessary, so as to stay inside the safe temperature and humidity limits of the electronics. This often need to be extended to the radome interior, to avoid for instance mould development.

Telecommunications and computer technology allow the transmission of radar data (usually) to a central data hub. Here, data from many radars as well as from other data sources, such as satellites are collected and integrated. It is required to remotely monitor the operation of each radar so that remote control actions or onsite actions can be determined from the distance.

Transmission can take place through fibre optic links or other high-speed ground-based lines, radio or microwave links, and satellite communication channels. It should be kept in mind that radars are often located at remote sites where not all telecommunication systems are available.

9.4 Coverage

The physical surveillance range of any weather radar is practically limited to about 450 km because even summer storms beyond this range are usually below the horizon: without beam blockage and with standard refractivity, in fact, the horizon's altitude at 450 km is 12 km; thus, only the tops of strong convective storms are detected.

For qualitative continuous monitoring of most of weather related phenomena, the typical maximum range is 230 km, for which the lowest altitude that the radar can observe without beam blockage is about 3 km. Furthermore, a pencil beam antenna with 1° Half Power Beam Width (HPBW) provides at 230 km an angular resolution of 4 km; hence, quantitative estimates are impossible at such ranges.

Consequently, QPE is typically restricted to a maximum range of about 90 (150) km for HPBW = 1° (0,6°). Without beam blockage, the lowest altitude that the radar can observe with the angle of elevation set to 0° at a range of 90 (150) km is 500 (1300) m.

The situation becomes obviously much more difficult in mountainous terrain, where weather echoes can only be detected at high altitudes because of beam shielding by relieves: there, terrain blockage combined with the shallow depth of precipitation during cold seasons and low melting levels causes inadequate radar coverage to support QPE at 60 km to 90 km range. How to tackle the emerging need for improved low-altitude coverage? Cost, radiation safety issues and aesthetic issues motivate the use of short-range radars equipped small antennas and low-power transmitters that could be installed on either low-cost towers or existing infrastructures. Low-cost, low-power, short-range X-band radars can be a valid solution for complementing long-range radars. In this case, the typical max. range is of the order of 50 km.

Radars can provide a nearly continuous monitoring of weather related to synoptic and mesoscale storms over a large area (say a range of 220 km, area 125000 km^2) if unimpeded by hills. Owing to ground clutter at short ranges, the Earth's curvature and the widening of the radar beam, quantitative precipitation detection more than 100 km away from the radar is possible only to a limited extent and the maximum practical range for weather observation is about 200 km.

Over large unpopulated areas, other means of observation are often not available or possible. In regions where very heavy and extensive precipitation is common, an S-band radar is recommended. In other areas, such as mid-latitudes, C-band radars can be effective at much lower cost. X-band radars suffer from attenuation and can only be used at short distances.

Draft for Members' Review

© World Meteorological Organization, 2018

9.5 Visibility and interferences

Unrestricted radar-visibility should be ensured at all radar sites. This applies to the immediate vicinity and also for longer distances.

In the case of small-scale applications, special attention should be paid to avoiding ground echoes in the target area. In large-scale applications, in contrast, unrestricted visibility is the top priority.

Ground echoes (ground clutter) are reflections of the radar beam off of natural topography (e.g. mountains, trees) and/or obstacles like buildings, wind farms etc. located in proximity to a weather radar. Side-lobes give rise to ground echoes.

Topographical maps can be used as a start to find an appropriate site for a weather radar. A site where the side lobes could be removed by natural terrain or trees is ideal. A site survey should include a camera and optical theodolite check for local obstacles such as towers or tall trees. In extreme cases, it is useful to employ a mobile radar system for confirming the suitability of the site. An electromagnetic interference surveillance shall be conducted.

Draft for Members' Review

© World Meteorological Organization, 2018

Annex A
(normative)

System performance parameter measurement

Three measurement diagrams are available depending on the configuration as described in Clause 5.2.1. As typical configuration, this annex shows parameter measurement methods of the dual polarisation independent transmitter type.

A.1 Standard Specification Format

Based on Clause 6, Table A.1 lists important weather radar performance parameters and their corresponding thresholds. Since some of the parameters are dependent on the radar wavelength separate thresholds are given for X-, C- and S-Band where necessary. Furthermore, each parameter threshold is given for three categories representing different levels of technical precision at the time when the Standard was published. Level "Threshold" represents minimum requirements for a quantitative weather radar system. Level "Common" refers to typical requirements for weather radars. Level "Achievable" requires high-end hardware as well as high-end design and manufacturing to comply with the thresholds. Consequently, the latter systems are significantly more expensive than radars systems of the "Common" level.

Since Table A.1 focuses on quantitative weather radars there can be other applications which do not require all parameters to be of Level "Threshold" or better. It is recommended to measure the parameters given in Table A.1. with a resolution better than 1/10 of the target value.

Table B.1 in Annex B lists examples of "Common" specifications of weather radar at the current market (as of 2016).

Table A.1 — Standard specification format

System performance requirements for weather radar		**Category**		
Fundamental parameters	Criteria	Achievable	Common	Threshold
Sensitivity	Reflectivity sensitivity shall be A dBz or less at a distance up to B km, where max unambiguous velocity of more than ±48 m/s is attained with 2-stagger f_{PRF} of either 2:3 or 3:4 or 4:5			
	For S-Band	< 10, 240	< 18, 240	< 23, 240
	For C-Band	< 5, 120	< 13, 120	< 18, 120
	For X-Band	< 0, 60	< 8, 60	< 13, 60
Spatial resolution	Beam resolution shall be θ_H and θ_V (in deg) or less	< 0,55 [a]	< 1	< 2

Draft for Members' Review

© World Meteorological Organization, 2018

	Range resolution shall be RR (in m) or less	≤ 75	≤ 150	≤ 1000
	Antenna side lobe shall be ΔV_{pa} (in dB) or less	< -27	< -23	< -20
	Range side lobe shall be ΔV_{pr} (in dB) or less for pulse compression radar.	< -70	< -50	< -30
Phase stability	Phase stability shall be θ_{ps} (in deg) or less			
	For S-Band	< 0,1	< 0,3	< 1
	For C-Band	< 0,2	< 0,6	< 2
	For X-Band	< 0,4	< 1,2	< 4
Accuracy of dual polarisation measurement	Cross polarisation ratio shall be XPD_{sys} (in dB) or less.	< -35	< -30	< -20
Other key parameters	Criteria			
Maximum rotation speed	Antenna maximum rotation speed shall be R_{max} (in rpm) or more.	≥ 10	≥ 6	≥ 2
Acceleration	As EL antenna acceleration, elevation drive time from 0 to 90 deg, and 90 to 0 deg shall be less than t_{aEL} (in sec).	< 10	< 20	< 40
	As AZ antenna acceleration, time from maximum speed to complete stop shalle be less than t_{aAZ} (in sec).	< 3	< 5	< 10
Antenna pointing accuracy	Antenna pointing accuracy shall be θ_{pa} (in deg) or less	< 0,05	< 0,1	< 0,2
Dynamic range	Dynamic range shall be LV_d (in dB) or more.	> 120	> 100	> 80
Unwanted emissions	The level of unwanted emissions shall be A dB or less at B MHz away from the central frequency f_0 (in MHz).	No values given [b]		

[a] except for S-band

[b] depending on national regulations

Draft for Members' Review

© World Meteorological Organization, 2018

A.2 Fundamental parameter measurement

System performance parameters shown in Table A.2 are sorted by the components of radar. For some items there are differences of measurement between pulse compression radar and non-pulse compression radar.

Table A.2 — System performance parameters

Component	Measurement parameter	Parameter category	Applicability	Remarks	Clause
Transmitter	Peak transmit power (P_t)	Sensitivity	Common		A.2.2
	Transmit pulse width (τ)	Sensitivity	Common	Also related to range resolution,	A.2.1
Antenna	Gain (G_t, G_r)	Sensitivity	Common		A.2.3
	Beam width ($\theta_{H/V}$)	Sensitivity and Spatial resolution	Common		A.2.3
	Cross polarisation ratio (*XPD*)	Accuracy of dual polarisation measurement	Common	To be measured along with "Isolation" in the Receiver category	A.2.4
Receiver	Minimum Detectable Signal (S_{min})	Sensitivity	Different for pulse-compression and non-pulse compression radar		A.2.5
	Pulse compression gain	Sensitivity	Pulse compression radar		A.2.6
	Range resolution (non-pulse compression radar)	Spatial resolution	Non-pulse compression radar		A.2.7.1
	Range resolution (pulse compression radar) Equal to Received pulse width (τ)	Sensitivity and Spatial resolution	Pulse compression radar		A.2.7.3
	H/V isolation	Accuracy of dual polarisation measurement	Common	Related to "Cross polarisation ratio (*XPD*)" in the Antenna	A.2.4

Draft for Members' Review

© World Meteorological Organization, 2018

				category	
System loss	Transmit path	Sensitivity	Common		A.2.8
	Receive path		Common		A.2.8
	Matched filter losses		Different for pulse-compression and non-pulse compression radar		A.2.8.3
	Radome transmission loss		Common		A.2.8

A.2.1 Transmit pulse half power width

A.2.1.1 Measurement diagram

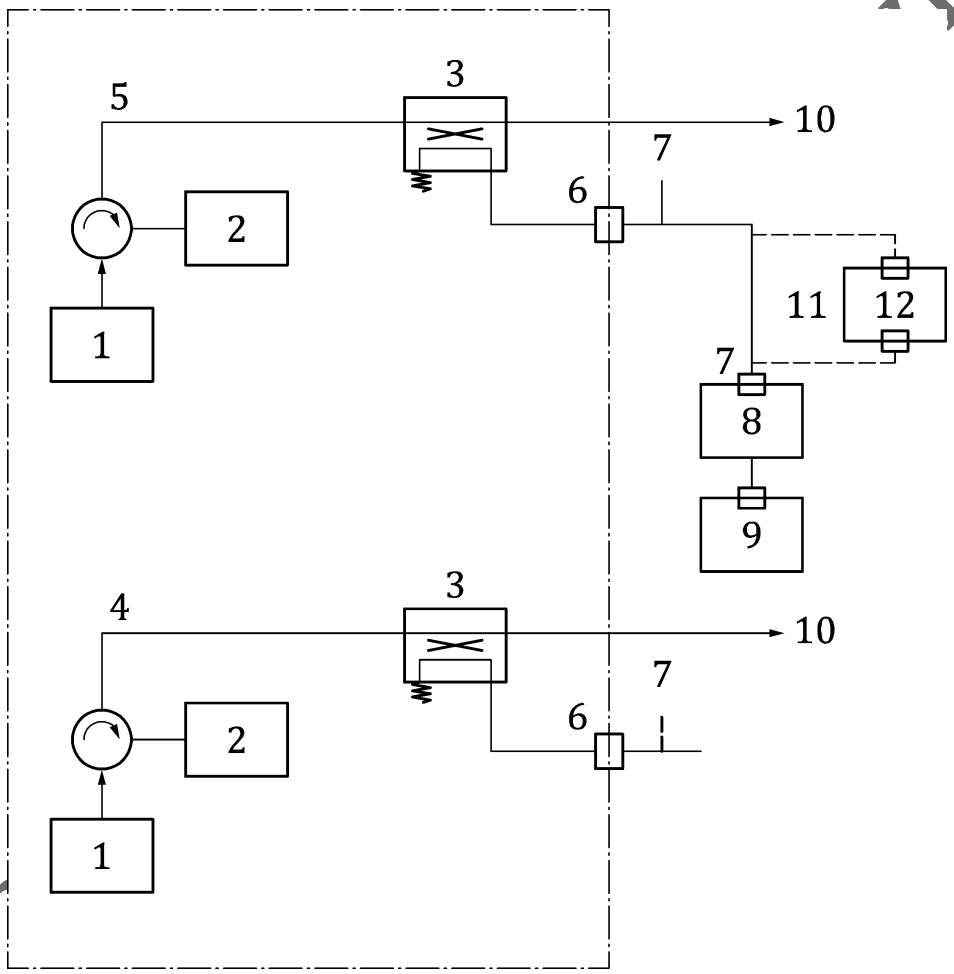

Key

1 Transmitter
2 Dummy load
3 Directional coupler
4 Vertical polarisation (V) channel
5 Horizontal polarisation (H) channel
6 Monitoring point for transmitter output
7 Cable for measurement
8 Detector
9 Oscilloscope
10 To antenna pedestal

© World Meteorological Organization, 2018

11 Insert
12 3 dB attenuator

Figure A.1 — Measurement diagram of transmit pulse half power width (τ) (dual polarisation independent transmitter type)

NOTE The test equipment shall be protected as the sampled transmitter power can be fairly high.

A.2.1.2 Measurement device

Table A.3 — Measurement device of transmit pulse width

No.	Measurement instrument	Remarks
1	Oscilloscope	
2	Detector	
3	Attenuator	3 dB attenuator

A.2.1.3 Measurement method

Connect a detector and oscilloscope to the transmit output monitoring point as in Figure A.1. First, as in Figure A.2 measure a coarse peak as P_p. Then record 10 % P_p, where P_p becomes 10 %. From the middle point between two 10 % P_p, draw a line upward. The cross point is set as P_p'.

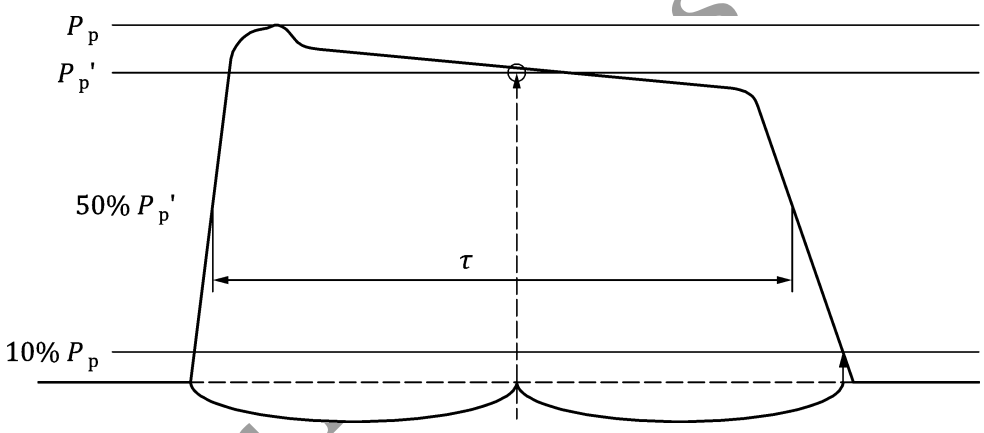

Figure A.2 — Pulse width definition

Then, measure the point where P_p' becomes 50 % using step attenuators. At this amplitude, draw a line in the time axis to get pulse width τ.

Alternately, pulse width can be measured using a peak power sensor/meter instead of oscilloscope/step attenuators.

Draft for Members' Review

© World Meteorological Organization, 2018

A.2.2 Peak transmit power (P_t)

A.2.2.1 Measurement diagram

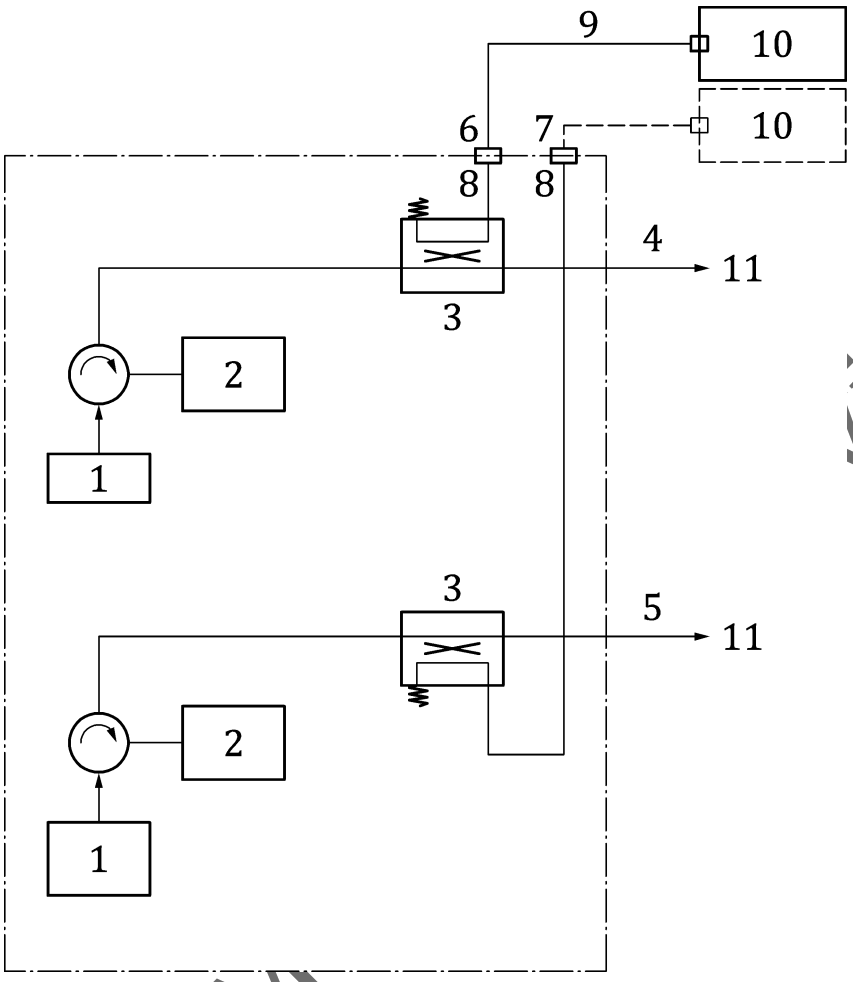

Key

1 Transmitter
2 Dummy load
3 Directional coupler
4 Horizontal polarisation (H) channel
5 Vertical polarisation (V) channel
6 H channel
7 V channel
8 Monitoring point for transmitter output
9 Cable for measurement
10 Power meter
11 To antenna pedestal

Figure A.3 — Pt measurement diagram (dual polarisation independent transmitter type)

NOTE The test equipment shall be protected as the sampled transmitter power can be fairly high.

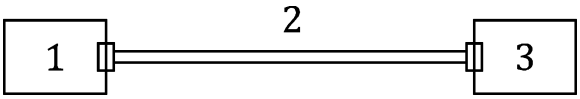

Key

Draft for Mid-term review

1 Signal generator
2 Cable for measurement
3 Power meter

Figure A.4 — Diagram of cable loss measurement

A.2.2.2 Measurement device

Table A.4 — Measurement device of cable loss

No.	Measurement instruments	Remarks
1	Power meter	
2	Signal generator	Hereafter simply referred to as SG
3	Measurement cable	

A.2.2.3 Measurement method

The forward port of the transmitter coupler shall be used for the measurement of the peak transmit power. Usually it is located very close behind the transmitter output and it is the first coupler in a radar system waveguide run. It is important to know the coupling ratio of the couplers. If possible, the power meter should be directly connected to the transmitter coupler without an additional cable. The transmitter power measurements shall be performed with all available pulse length settings. The corresponding f_{PRF} shall be chosen in order to get the same duty cycle for each pulse length setting.

A.2.2.3.1 Cable loss measurement

If the power meter cannot be directly connected to the transmitter coupler and a cable has to be added the loss of the cable shall be measured and added to the peak power measurement. Otherwise the power meter shall be connected directly to the coupler.

Measure the cable loss L_c to be used for P_t measurement in advance.

Set the frequency of the SG to the transmission frequency f_0 of the radar equipment with sufficient output level P_{SG} (for example, 0 dBm).Connect one end of the cable to the SG and the other end to the power meter as shown in Figure A.4.

The reading of the power meter shows the attenuation L_c of the cable with negative numbers.

A.2.2.3.2 Measurement of P_t

Fast peak power sensors are typically less accurate in terms of absolute power than slow average power sensors. A peak power sensor is used to determine a coarse peak power and accurate pulse width (refer to A.2.1). On the other hand, average transmit power is measured by an average power meter. Then peak power is finally determined using these values.

Connect the power meter directly or with the cable to the transmitter coupler and set the transmitter in the transmission mode. Depending on the transmitter type, measure the average power using the methods shown in Figure A.1 to Figure A.4. Determine the loss L_t (including the degree of coupling of the directional coupler) from the transmission output to the transmitter coupler. If the reading of the power meter is P_m' (in dBm), the transmit power P_A is obtained by the following formula.

$$P_A = P_m' + L_t + L_c \qquad \text{(A.1)}$$

Draft for Members' Review

© World Meteorological Organization, 2018

To convert the average power P_A to transmit peak power P_t, we will use the transmitter duty cycle, which is dictated by the pulse width (τ) and pulse repetition frequency (f_{PRF}). f_{PRF} is measured with the diagram of Figure A.1 (Frequency counter can be used instead of oscilloscope).

The transmit power to be used as the calibration value is calculated as:

$$P_t = \frac{P_A}{\tau \cdot f_{PRF}} \tag{A.2}$$

Refer to A.2.1 for pulse width measurement.

A.2.3 Antenna gain, beam width

A.2.3.1 General

There are three methods for accurate antenna characterization, which differ significantly: The far-field range method, the compact range method, and the near-field measurement method. In this chapter only the far-field range method is described.

A.2.3.2 Measurement diagram

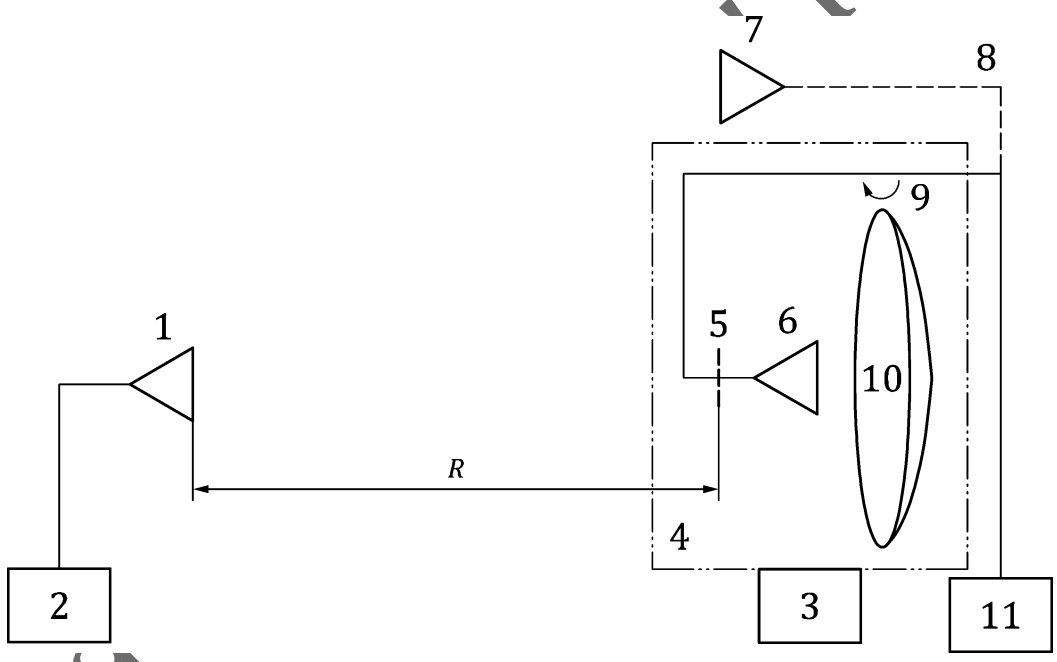

Key

1 Transmission antenna
2 Signal generator
3 Rotating platform
4 Antenna to be measured
5 Measuring point
6 Feed horn
7 Standard horn antenna
8 Replaced by the antenna for gain measurement
9 Az rotation for G_0 measurement
10 Reflector
11 Receiver

Figure A.5 — Measurement diagram of antenna gain

Draft Review

© World Meteorological Organization, 2018

The distance R from an antenna to be measured to a transmission antenna should be basically far-field, namely $R > 2D^2/\lambda$, (where D is antenna diameter, λ is wavelength) but if performance equal to or better than in case of far-field can be proven, near-field measurement should be also acceptable.

A.2.3.3 Measurement device

Table A.5 — Antenna gain measurement device

No.	Name of measurement device	Remarks
1	Receiver	
2	Pattern recorder	
3	Standard horn antenna	
4	SG	
5	Transmission antenna	
6	Mixer	

A.2.3.4 Measurement method

A.2.3.4.1 Antenna Gain

Receive the output of signal generator (SG), which is radiated from the transmission antenna installed at a sufficiently remote distance in the Measurement diagram shown in Figure A.5, with the measured antenna placed on the rotating table and record the received signal level into the pattern recorder through the receiver. If the pattern recorder records the received signal level in dB scale, the result of the gain pattern (G_1) of the measured antenna is drawn as shown in the Figure A.6. Then, replace the feed horn by the standard horn and fix it in the direction of transmission antenna and similarly record the received signal level into the pattern recorder.

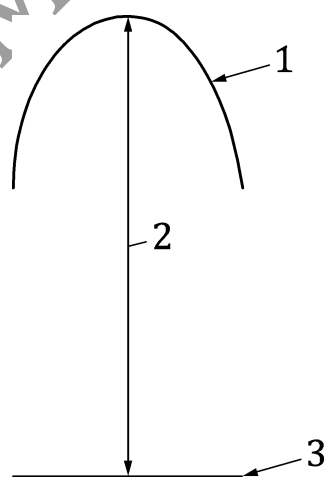

Key

1 Gain pattern of antenna to be measured (G_1)
2 Gain difference ΔG (read out from pattern recorder)
3 Gain of standard horn antenna G_s (basis)

Figure A.6 — Example of antenna pattern chart

Draft for Members' Review

© World Meteorological Organization, 2018

After this, compare G_1 and G_S and read the maximum level difference (gain difference ΔG) from the record of the pattern recorder.

The gain G_S of the standard horn which is measured in advance is added to the ΔG to obtain the antenna gain $G(G_t, G_r)$

This can be calculated as follows:

$$G = \Delta G + G_s \text{ (dBi)} \quad \text{(A.3)}$$

Measure the values of H and V polarisation in case of dual polarisation type. If the frequency used for measurement is specified, measure the level at that specified frequency. If the frequency range is specified, measure the level at the upper/lower limits as well as the mean value.

Measure the loss of the connection waveguide (component of the antenna) in advance and subtract it to obtain the antenna gain.

A.2.3.4.2 Antenna Beam width ($\theta_{H/V}$)

Similar to the antenna gain, receive the output of SG, which is radiated from the transmission antenna installed at a sufficiently remote distance, with the measured antenna placed on the rotating table and, at the same time, measure the reception output in the rotating direction using the reference antenna.

Read the value at the 3 dB down point of beam width from the chart of received gain pattern which was recorded by the pattern recorder (Figure A.7).

Draft for Members' Review

© World Meteorological Organization, 2018

A.2.4 Cross polarisation isolation

A.2.4.1 Measurement diagram

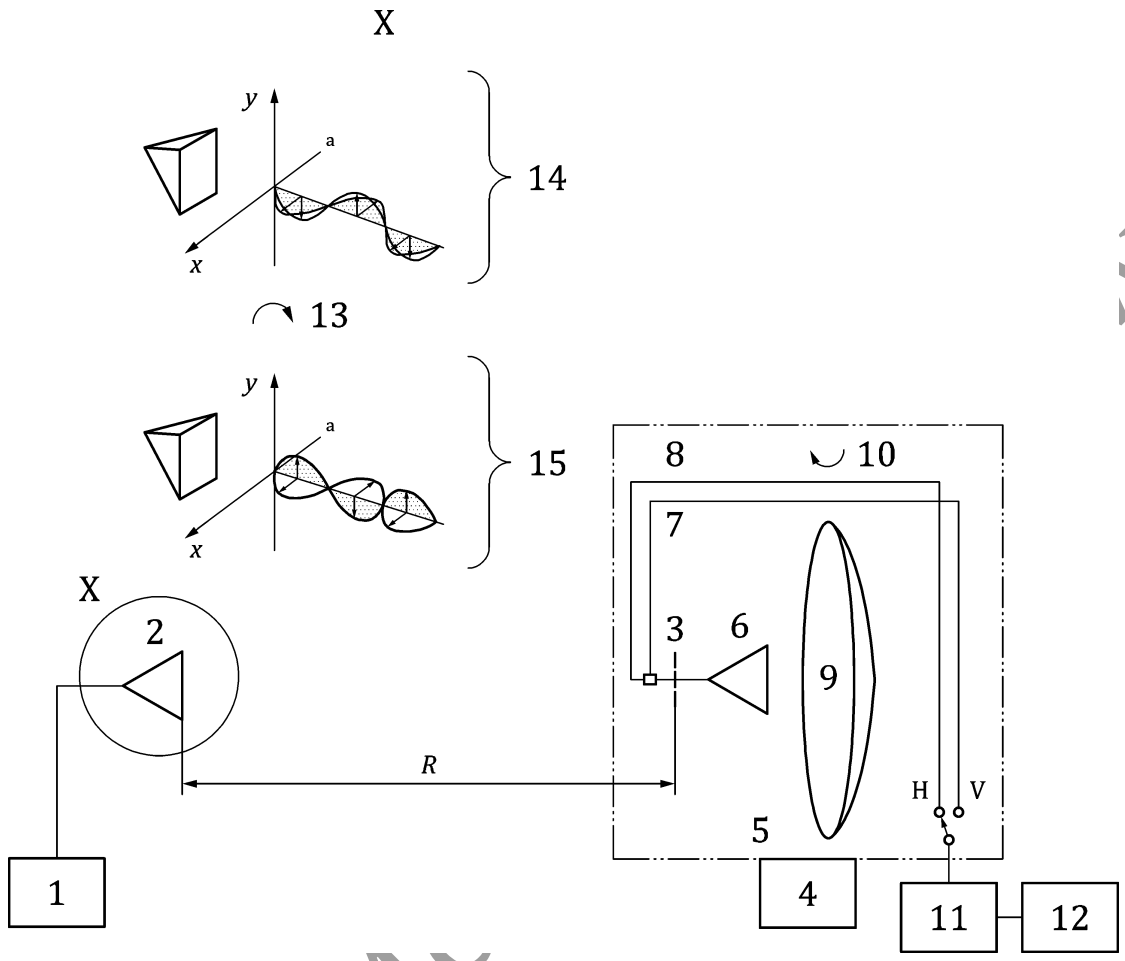

Key

1 Signal generator
2 Transmission antenna
3 Measuring point
4 Rotating platform
5 Antenna to be measured
6 Feed horn
7 V-port
8 H-port
9 Reflector
10 Az rotation for directivity measurement
11 Receiver
12 Pattern recorder
13 90 degrees turn of antenna
14 Horizontal polarisation wave
15 Vertical polarisation wave

Figure A.7 — Measurement diagram of antenna cross polarisation ratio

Draft for Mo

© World Meteorological Organization, 2018

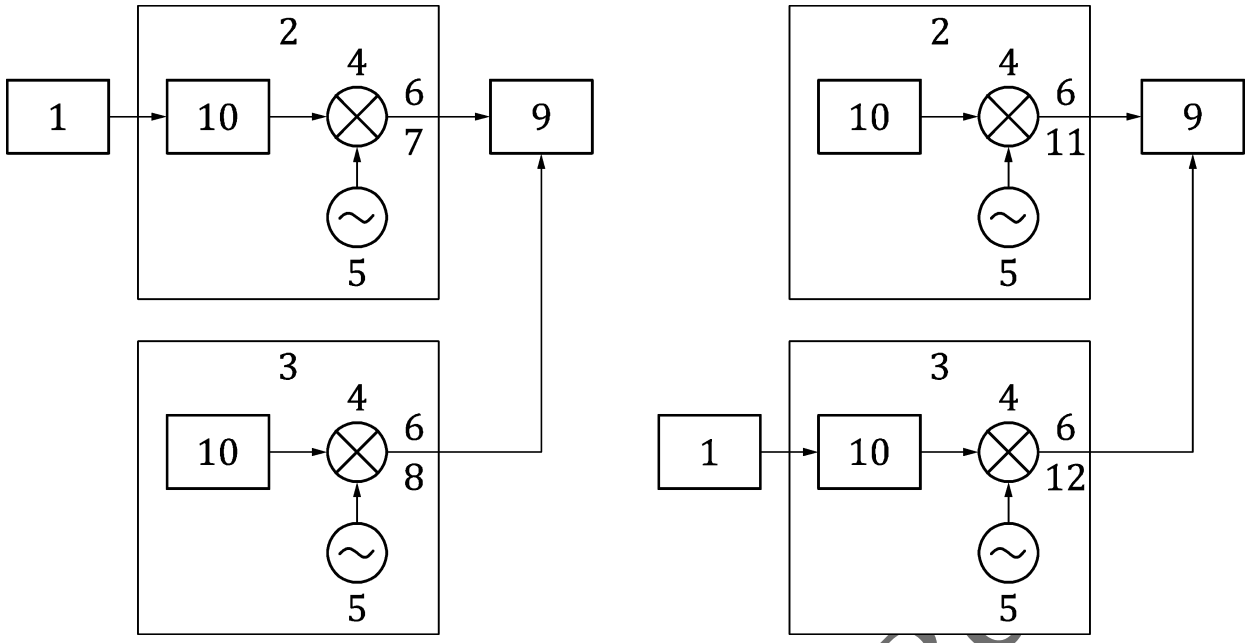

Key

1 Signal generator
2 Receiver (H)
3 Receiver (V)
4 Mixer
5 OSC
6 IF output
7 IFLVh-h
8 IFLVh-v
9 Power meter
10 LNA
11 IFLVv-h
12 IFLVv-v

Figure A.8 — Measurement of H/V isolation

A.2.4.2 Measurement device

Refer to A.2.3.

A.2.4.3 Measurement method

Regarding Clauses 6.2.4, cross polarisation isolation is measured. Isolation for the receiver is included since poor isolation at the receiver degrades system performance, even if cross polarisation ratio at the antenna is high.

As in Figure A.8, cross polarisation ratio at the antenna measures a ratio of the peak value of a co-polar transmitted signal, received by cross-polar, to the peak value of the received co-polar signal. Cross polarisation ratio for H/V polarisation are expressed as follows:

$$XPD_{\mathrm{h}} = Peak_{\mathrm{cross,h}} - Peak_{\mathrm{co,h}} \quad \text{(A.4)}$$

$$XPD_{\mathrm{v}} = Peak_{\mathrm{cross,v}} - Peak_{\mathrm{co,v}} \quad \text{(A.5)}$$

where

Draft for Members' Re

© World Meteorological Organization, 2018

$Peak_{\mathrm{co}}$ is the peak value of a co-polar signal with suffix h and v representing horizontal and vertical polarisation waves.

$Peak_{\mathrm{cross}}$ is the maximum value of a cross-polar signal within the angular range of the 3dB beam width, with suffix h and v representing horizontal and vertical polarisation wave.

H-pol:

To find out $Peak_{\mathrm{co}}$ and $Peak_{\mathrm{cross}}$, plot the distribution of co-polar and cross-polar signals in the horizontal plane of the receiving antenna on a sheet of paper (as in Figure A.9). Then rotate the receiving antenna by 90 degree and plot the distribution of co-polar and cross-polar signals in the vertical plane of the receiving antenna on a sheet of paper.

V-pol:

To change the polarisation directions from horizontal to vertical, rotate the transmission antenna by 90 degrees.

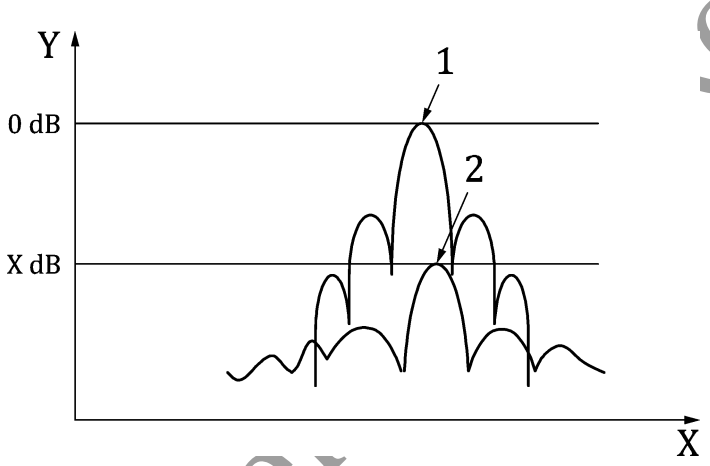

Key

1 $Peak_{\mathrm{co}}$
2 $Peak_{\mathrm{cross}}$
X Degree
Y Signal power

Figure A.9 — Measurement of antenna cross polarisation ratio

Next, isolation at the receiver is measured (Figure A.8). Connect SG to LNA (H). Set the frequency of signal generator (SG) to center frequency f_0 used by the radar. Record the signal level of the H-port and V-port, $IFLV_{\text{h-h}}$, $IFLV_{\text{h-v}}$ respectively, at f_0 with power meter, and take its difference, $IFLV_{\text{diff-h}}=IFLV_{\text{h-v}}-IFLV_{\text{h-h}}$, as isolation level for the H-port. Then connect SG to LNA (V). Set the frequency of signal generator (SG) to f_0. Record the signal level of the V-port and H-port, $IFLV_{\text{v-v}}$, $IFLV_{\text{v-h}}$ respectively, and take its difference, $IFLV_{\text{diff-v}}=IFLV_{\text{v-h}}-IFLV_{\text{v-v}}$, as isolation level for the V-port. Instead of a power meter the calibrated digital receiver can be used.

Cross polarisation ratio at the antenna and isolation at the receiver are combined to express the H/V isolation of the system through the antenna to the receiver, $XPD_{\mathrm{sys}}(h)$, $XPD_{\mathrm{sys}}(v)$:

$$XPD_{\mathrm{sys}}(h) = \max\left(XPD_{\mathrm{h}}, LV_{\text{diff-h}}\right) \text{ (dB)} \tag{A.6}$$

$$XPD_{\mathrm{sys}}(v) = \max(XPD_{\mathrm{v}}, LV_{\text{diff-v}}) \tag{A.7}$$

Draft for Meeting review

© World Meteorological Organization, 2018

A.2.5 Minimum detectable signal (S_{min})

A.2.5.1 Theoretical estimation

The minimum detectable signal (S_{min}) can be calculated by the following formula.

$$S_{\min} = 10\log(kTB) + NF + 30 \text{ (dBm)} \quad \text{(A.8)}$$

where

k is the Boltzmann constant ($1{,}38\times10^{-23}$ W/Hz/K)
T is the temperature, in K
B is the bandwidth of receiver, in Hz
NF is the noise figure, in dB
30 is a constant for dBw to dBm

B and NF are measured by the method shown in A.2.5.2. The temperature T is the physical temperature of the receiver. It should not deviate too much from 290 K in order to avoid measurement errors, see e.g. [19].

The S_{min} can now be calculated for any given signal-to-noise ratios. For instance, for SNR=0 dB the S_{min} equals the noise power. Refer to 6.2.1 for SNR which we propose in this document to derive sensitivity.

Measurement methods are different for pulse compression and non-pulse compression radars.

A.2.5.2 Non-pulse compression radar

A.2.5.2.1 Band width measurement

A.2.5.2.1.1 Measurement diagram

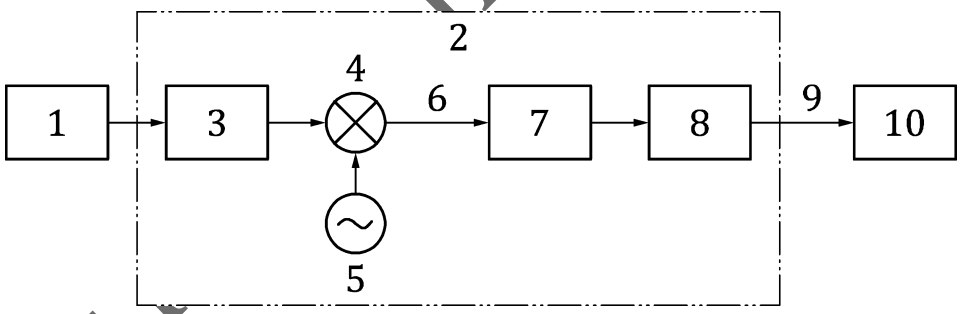

Key

1 Signal generator
2 Receiver/signal processor
3 LNA
4 Mixer
5 OSC
6 IF output
7 AD
8 BPF
9 Received signal
10 PC

Figure A.10 — Bandwidth measurement diagram for non-pulse compression radar

Draft for Members' Review

© World Meteorological Organization, 2018

A.2.5.2.1.2 Measurement device

Table A.6 — Measurement device of bandwidth for non-pulse compression radar

No.	Name of measurement device	Remarks
1	SG	RF
2	PC (as Personal Computer)	Received power recording and display

A.2.5.2.1.3 Measurement method

Set the frequency of signal generator (SG) to center frequency f_0 used by the radar and set the suitable output power of SG within the receiver input range, then record the received power P_0 with the PC.

Next, record the frequency f_+ of SG when the received power goes 3 dB down from P_0 while increasing frequency of SG from f_0. Similarly, record the frequency f_- of SG when received power goes 3 dB down from P_0 while decreasing frequency of SG from f_0. Thus, the bandwidth B is obtained by the following calculation (see also Figure A.11). Step size of SG shall be determined so that there's no significant gap in the frequency characteristics obtained.

$$B = f_+ - f_- \text{ (Hz)} \tag{A.9}$$

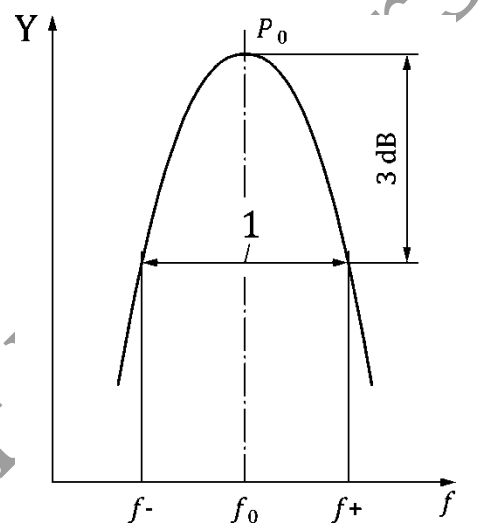

Key

1 Bandwidth
Y Power

Figure A.11 — Measurement of bandwidth (non pulse-compression radar)

A.2.5.2.2 NF measurement

The ambient noise of a system is usually the lower limit of what a receiver can detect. As with any receiving system the signal is competing with the excess thermal noise generated by the receiver. Here the amplifiers in the low noise front end are specially a source for additional noise. A reduction of the amplifier noise would result in an enhancement of the minimum detectable signal (S_{min}). The excess thermal noise generated in the receiver is characterized by a parameter called noise figure. The noise figure is the ratio of the additional receiver noise to the thermal noise floor present at the receiver input.

Draft for Members' Review

© World Meteorological Organization, 2018

$$NF = 10\log\left(\frac{SNR_{\text{in}}}{SNR_{\text{out}}}\right) \text{ (dB)} \tag{A.10}$$

with $SNR = \frac{Signal_{\text{level}}}{Noise_{\text{level}}}$, in dB.

To determine the noise figure of the radar receiver a calibrated noise source delivers a signal of known noise level (N_{on}) into the receiver front-end. The output power of the receiver can be measured corresponding to the noice source turn on and off (N_{on} and N_{off}). The two power values are used to calculate the Y-factor. The Y-factor is a ratio of the two noise power levels:

$$Y = \frac{N_{\text{on}}}{N_{\text{off}}} \tag{A.11}$$

in terms of linear power.

The noise figure is expressed in dB. The Y-factor and the excess noise ratio (ENR) of the noise diode can be used to calculate the noise figure:

$$NF = ENR - 10\log(Y - 1) \text{ (dB)} \tag{A.12}$$

A.2.5.3 Pulse compression radar

A.2.5.3.1 Bandwidth measurement

A.2.5.3.1.1 Measurement diagram

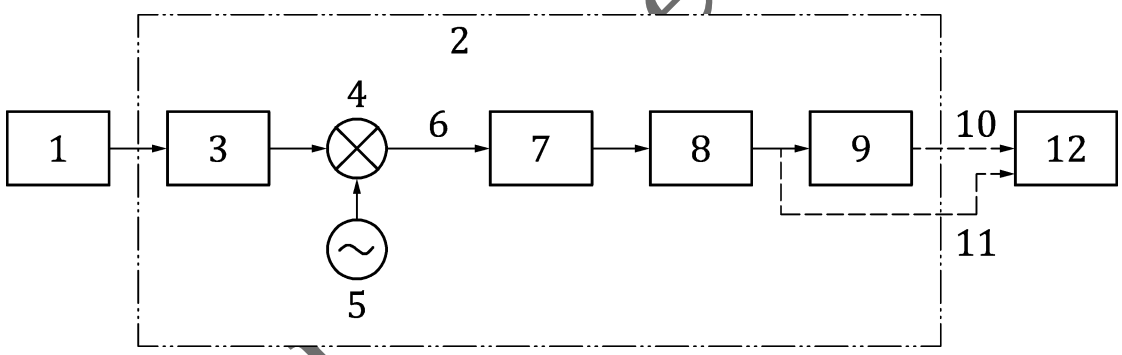

Key

1 Signal generator
2 Receiver/signal processor
3 LNA
4 Mixer
5 OSC
6 IF output
7 AD
8 BPF
9 Pulse compression
10 FFT of reference wave
11 Bandwidth
12 PC

Figure A.12 — Bandwidth measurement diagram for pulse compression radar

A.2.5.3.1.2 Measurement device

Refer to A.2.5.2.1.2

Draft for Members' Review

© World Meteorological Organization, 2018

A.2.5.3.1.3 Measurement method

Pulse compression processing functions as a matched filter and its performance depends on the frequency characteristic of the reference wave used for pulse compression. The frequency characteristic of the pulse compression receiver is determined by the product of the band-pass filter (BPF) and the reference wave in the frequency domain.

Frequency characteristic of BPF can be measured by the same method as the non-pulse compression receiver using SG as input and bypassing pulse compression processing as shown in Figure A.12. Frequency characteristic of the reference wave is obtained by FFT of its time waveform.

These frequency characteristics are multiplied off-line. The bandwidth is defined as the width measured at the 3dB down point from the peak at center frequency f_0 (Figure A.13) likewise in Figure A.11.

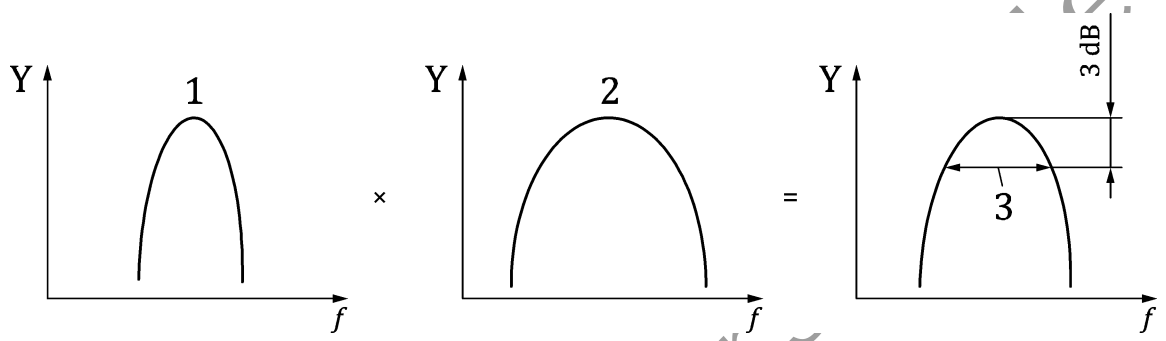

Key

1 BPF
2 Reference wave
3 Receiver bandwidth of pulse compression radar
Y Power

Figure A.13 — Measurement of bandwidth (pulse compression radar)

A.2.5.3.2 *NF* measurement

Same as A.2.5.2.2

A.2.6 Pulse compression gain

This measurement is applied only for pulse compression radar.

Draft for Member Review

© World Meteorological Organization, 2018

A.2.6.1 Measurement diagram

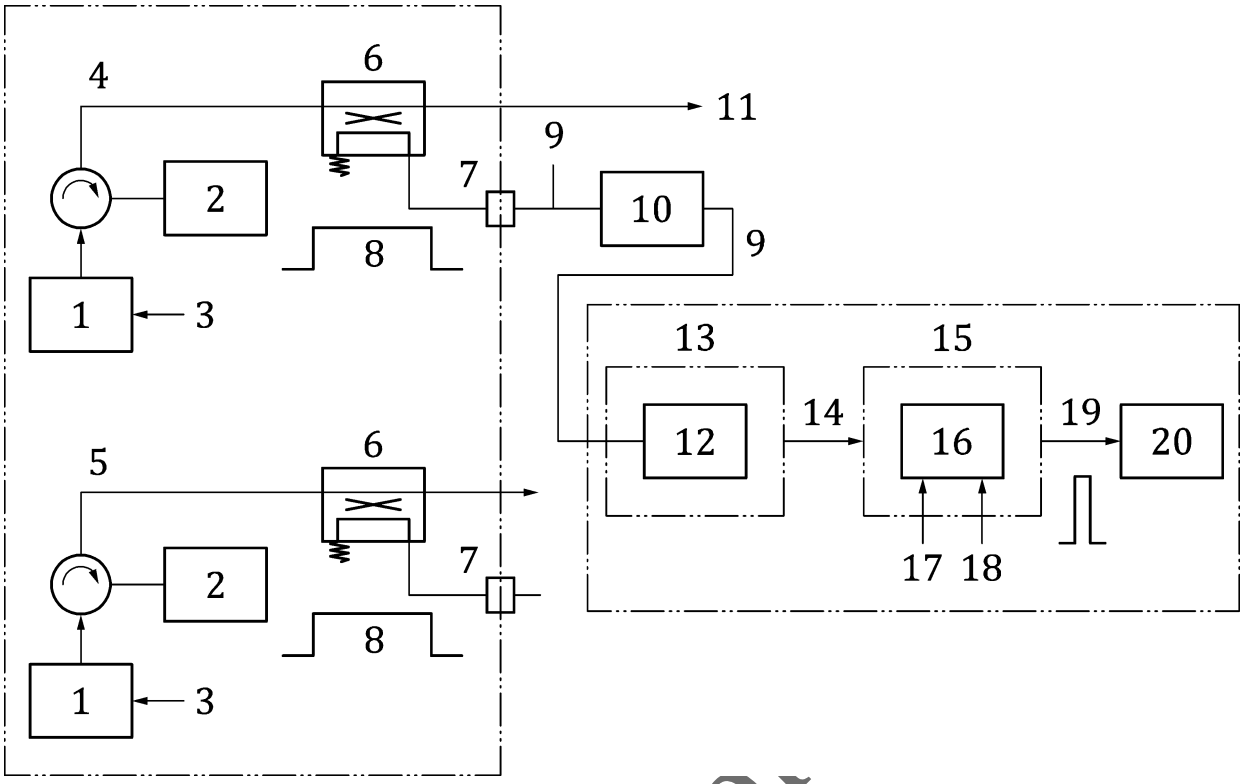

Key

1 Transmitter
2 Dummy load
3 Pulse modulation on/off
4 Horizontal polarisation (H) channel
5 Vertical polarisation (V) channel
6 Directional coupler
7 Monitoring point for transmitter output
8 Transmission pulse
9 Cable for measurement
10 High power attenuator
11 To antenna pedestal
12 LNA
13 Receiver
14 IF output
15 Signal processor
16 Pulse compression
17 Reference signal on/off
18 Window function on/off
19 Received signal
20 A-Scope

Figure A.14 — Gc measurement diagram (dual polarisation independent transmitter type)

A.2.6.2 Measurement device

Table A.7 — Measurement device of pulse compression gain (G_c)

No.	Devices name	Remarks

Draft for Member

© World Meteorological Organization, 2018

1	High power attenuator	For P_t attenuation to input to receiver
2	Power meter	For cable loss measurement
3	SG	For cable loss measurement

A.2.6.3 Measurement method

Attenuate the transmit power monitoring output to a level until within the received dynamic range, via an attenuator, and connect it to the first stage LNA of the receiver. The pulse width, pulse repetition frequency, and modulation method of input signals are set as same as when in operation.

Pulse compression gain is measured as SNR difference when the pulse compression is switched ON and OFF. Measure the signal and noise level when the pulse compression is OFF as $S_{\mathrm{off}}, N_{\mathrm{off}}$ respectively, and its ratio as SNR_{off}. Likewise, measure the signal and noise level when the pulse compression is ON as S_{on}, N_{on}, respectively, and its ratio as SNR_{on}. Then SNR is expressed as $SNR_{\mathrm{off}} = S_{\mathrm{off}}/N_{\mathrm{off}}$ and $SNR_{\mathrm{on}} = S_{\mathrm{on}}/N_{\mathrm{on}}$, respectively. Pulse compression gain G_{c} is expressed as in unit of dB.

$$G_{\mathrm{c}} = 10\log(SNR_{\mathrm{on}}/SNR_{\mathrm{off}}) \ \ (\mathrm{dB}) \tag{A.13}$$

In case of the measurement with pulse compression OFF, reference signal and window function are respectively OFF for the signal processor as shown in Table A.8. In case of the measurement with pulse compression ON, reference signal and window function are respectively ON for the signal processor. Window function loss is included in this measurement. As for noise, measurement value in a non-input state is used. Read 6.2.1.5 and A.2.7.3, with respect to sensitivity calculation for pulse compression radar.

Table A.8 — Setting for measurement of pulse compression gain

Measuring item	Setting				Remarks
	Pulse compression	Transmit power	Reference signal	Window function	
S_{off}	OFF	ON	OFF	OFF	
N_{off}	OFF	OFF	OFF	OFF	
S_{on}	ON	ON	ON	ON	
N_{on}	ON	OFF	ON	ON	

Draft for Members' Review

© World Meteorological Organization, 2018

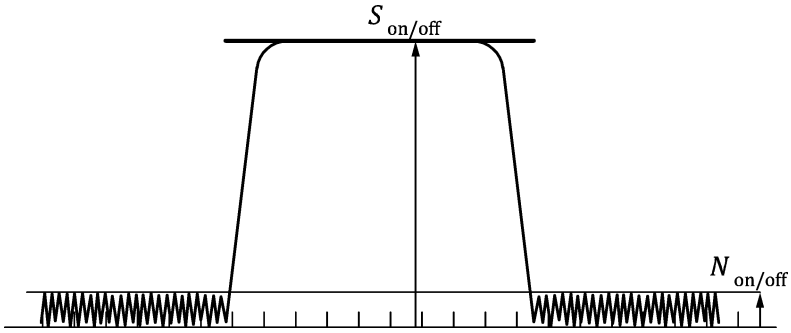

Figure A.15 — Pulse compression gain measurement

A.2.7 Range resolution

A.2.7.1 Non-pulse compression radar

There are three parameters related to range resolution as follows, as described in 6.2.2.3.

— Transmit pulse half width

— Sampling interval of received signal.

— Bandwidth of receiver

Range resolution as the system performance is subject to the worst value among these values.

A.2.7.2 Transmit pulse half power width

Same as A.2.1.

A.2.7.2.1 Sampling interval of received signal

Sampling interval of received signal is processing time interval (t_s) in the final stage of signal processor. Using a unit of time interval (t_s) as microsecond (μs), the value in unit of length (L_{si}) is calculated as follows:

$$L_{si} = 150 t_s \ \text{(m)} \tag{A.14}$$

A.2.7.2.1.1 Measurement diagram

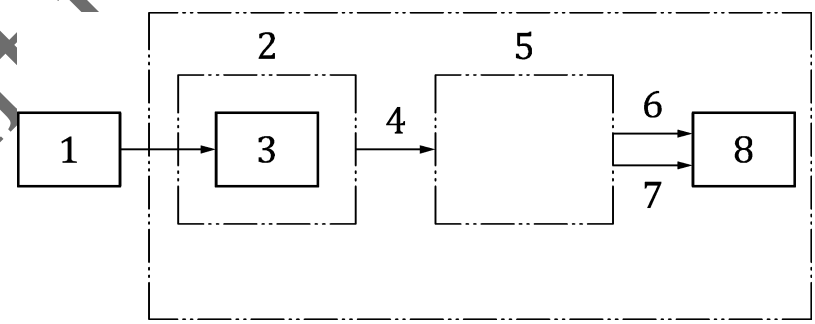

Key

1 Signal generator
2 Receiver
3 LNA
4 IF input
5 Signal processor
6 Received signal
7 Sampling clock

Draft for Members' Review

© World Meteorological Organization, 2018

8 Oscilloscope

Figure A.16 — Sampling interval measurement

A.2.7.2.1.2 Measurement method

Input a sine AM modulation signal with the signal generator to the receiver. Check the received signal and sampling clock of the signal processor output on the monitor of (software emulated) oscilloscope, and measure the sampling interval of the sampling clock (see also Figure A.17).

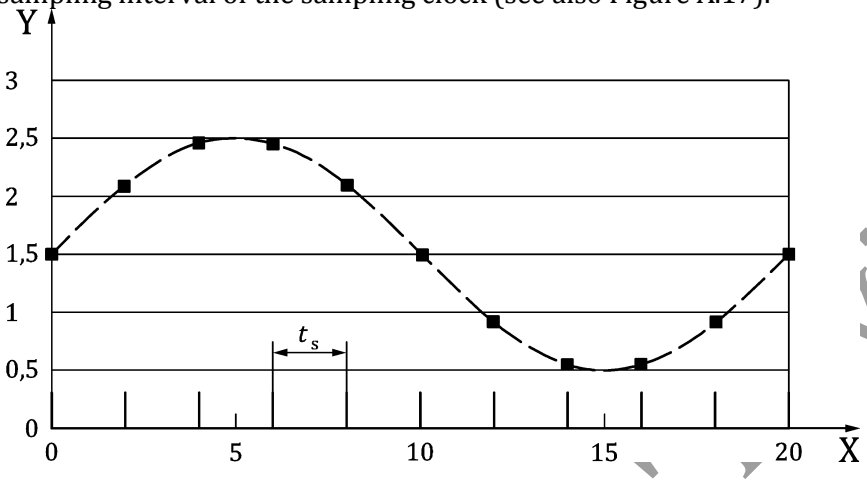

Key

— — — Receiver input signal
■ Sampled signal
——— Sampling clock
X Time, in µs

Figure A.17 — Example of oscilloscope screen

A.2.7.2.2 Bandwidth of receiver

Read A.2.5.2.

Draft for Members' review

© World Meteorological Organization, 2018

A.2.7.3 Pulse compression radar

A.2.7.3.1 Measurement diagram

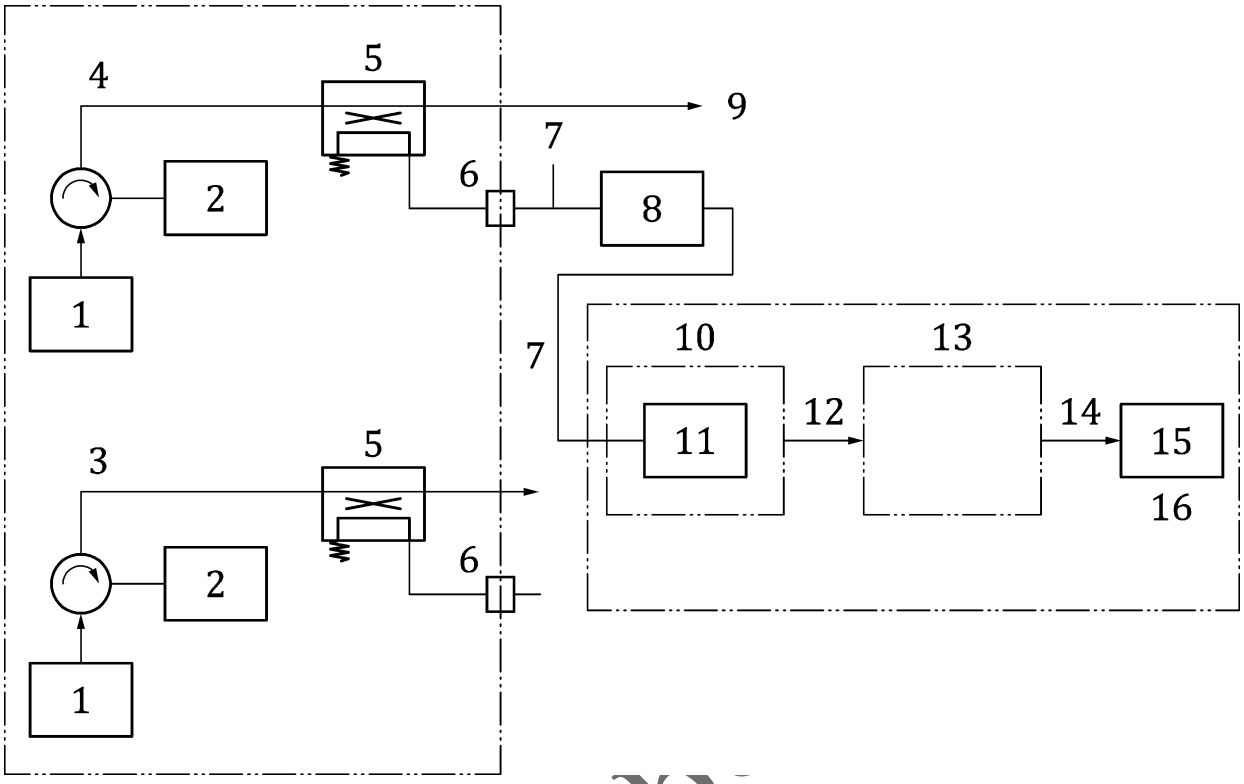

Key

1 Transmitter
2 Dummy load
3 Vertical polarisation (V) channel
4 Horizontal polarisation (H) channel
5 Directional coupler
6 Monitoring point for transmitter output
7 Cable for measurement
8 High power attenuator
9 To antenna pedestal
10 Receiver
11 LNA
12 IF output
13 Signal processor
14 Received signal
15 A-scope
16 Measure pulse width

Figure A.18 — measurement diagram of pulse width after pulse compression (dual-polarisation independent transmitter type)

A.2.7.3.2 Measurement device

Table A.9 — Measurement Device

No.	Measurement instruments	Remarks

Draft for Membe

© World Meteorological Organization, 2018

1	High Power Attenuator	More than 80 dB
2	A-Scope	System component

A.2.7.3.3 Measurement method

For pulse compression radar, measure receive pulse width after pulse compression processing, while the transmit pulse is turned back to the receiver.

As in Figure A.18, connect a high-power attenuator to the transmit power monitoring point with a measurement cable, and connect its output to the first stage LNA of the receiver. The high-power attenuator is chosen that can attenuate transmit power sufficiently until a level within the receiver's dynamic range. Transmitter is set to long pulse continuous transmission mode.

Refer to 6.2.2.3 for the derivation of range resolution. Calculation example of received pulse width and a graph of received pulse shape are shown in Figure A.19.

Table A.10 — Calculation table of received pulse width

Measured data (Input)	Time (μs)	Normalized power
	x_1	y_1
	-1	0,2920
	x_2	y_2
	0	1,0000
	x_3	y_3
	0,5	0,3999
μ (see Eq. (28))	-0,1987	
σ^2 (see Eq. (29))	0,2448	
A (see Eq. (30))	1,0840	
τ(μs) (see Eq. (31))	1,16	

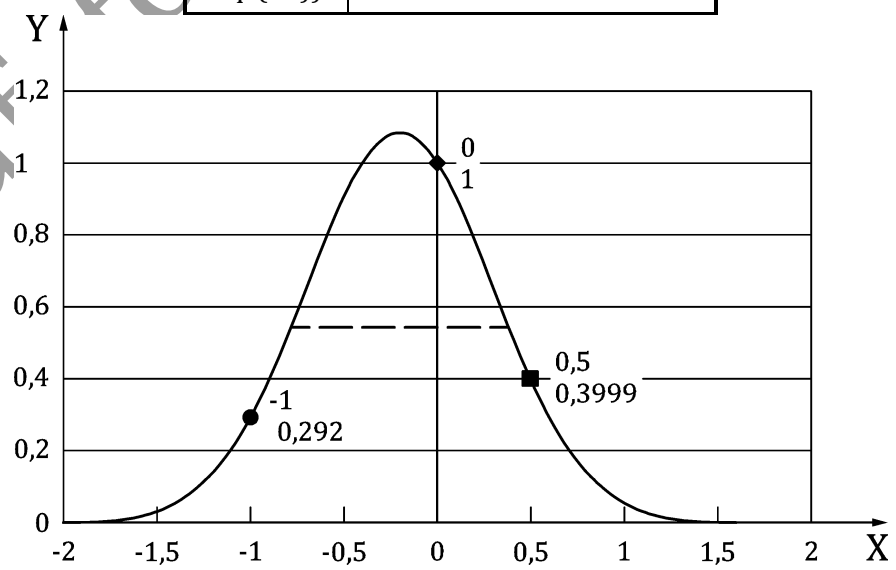

Key

Draft for Members' Review

© World Meteorological Organization, 2018

——— Calculated waveform
— — — Pulse width
● Measured value 1
◆ Measured value 2
■ Measured value 3
x Time, in μs
y Normalized power

Figure A.19 — Received pulse shape and pulse width calculated with measured values

This value is also used for sensitivity, where pulse compression gain is added. Read 6.2.1.5 and A.2.6 to calculate sensitivity for pulse compression radar.

A.2.8 System loss (*F*)

The elements of system loss (*F*) include the following:

— Transmission system loss: F_{tx} (dB)

— Reception system loss: F_{rx} (dB)

— Matched filter losses: F_{mf} (dB)

— Radome transmission loss: F_{rd} (dB)

The system loss *F* is expressed as follows.

$$F = F_{tx} + F_{rx} + F_{mf} + 2F_{rd} \text{ (dB)} \quad \text{(A.15)}$$

As the radome is subject to loss during both transmission and reception, it is multiplied by 2.

A.2.8.1 Measurement of radome transmission loss (F_{rd})

A.2.8.1.1 General

While the attenuation of the radome material is quite constant in time, thin layers of water, snow or ice can cause a very significant but temporal increase in radome attenuation which is also known as "wet radome attenuation". Up to now, there are no operational and widely used methods to correct for wet radome attenuation due to its temporal and spatially variant. Usually the wetting is non-uniform which leads to inhomogeneous coverage of hydrometeors on the radome surface. Attenuation of the radome material ("dry radome attenuation") is determined by the radome manufacturer by testing single radome panels.

A.2.8.1.2 Measurement diagram

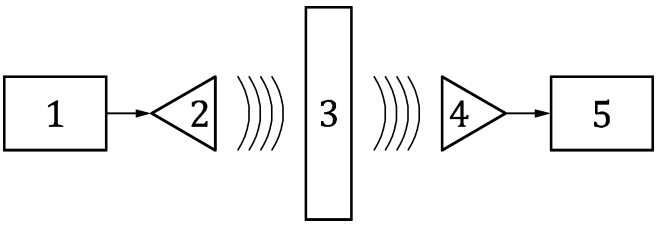

Key

1 Signal generator
2 Transmission antenna
3 Radome panel

Draft for Members' Review

© World Meteorological Organization, 2018

4 Receive antenna
5 Power meter

Figure A.20— Measurement diagram of radome transmission loss at a test range

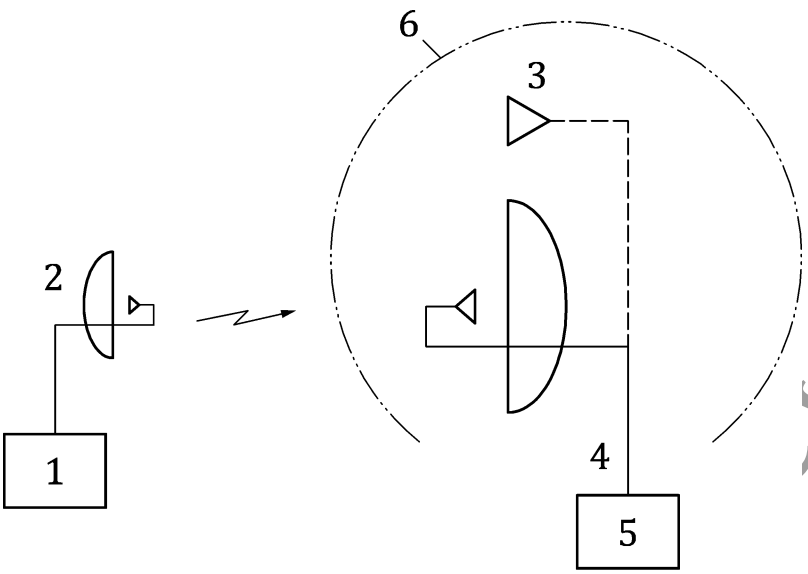

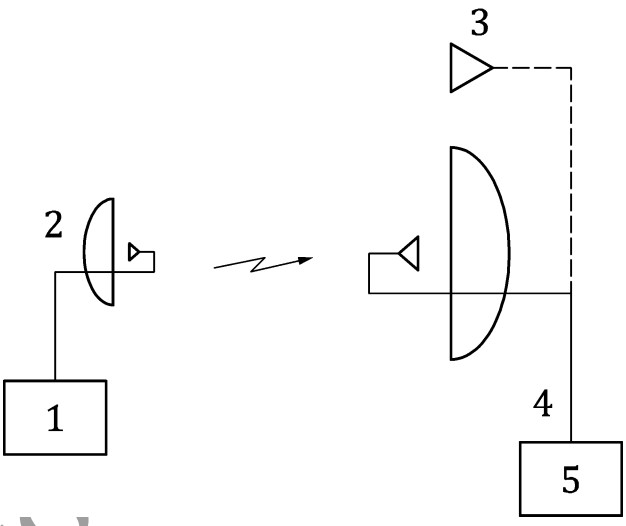

Key

1 Signal generator
2 Transmission antenna
3 Standard horn antenna
4 Antenna to be measured
5 Receiver (pattern recorder)
6 Radome

Figure A.21 — Measurement diagram of radome transmission loss at the radar site

A.2.8.1.3 Measurement device

Refer to A.2.3. (Plus a radome test piece)

A.2.8.1.4 Measurement method

The radome loss can be measured with two methods. The first one is using a sufficiently large test piece of the radome at a test range. The second one is being performed with a fully assembled radome.

Draft for review

© World Meteorological Organization, 2018

As shown in Figure A.20, a radome panel is installed between two antennas with a signal generator on one side and a power meter on the other site. The distance between the two antennas should be the far field distance of the bigger antenna. The first measurement is done without the radome panel and the second with the radome panel setup in the measurement range. The difference in the received power equals the radome loss.

The second method (with and without radome) is shown in Figure A.21. The measurement is performed with the radome in a dry state.[2]

If the gain (in dB) with the radome or radome panel is G and the gain (in dB) without radome or radome panel is G_0, the transmit power loss of the radome F_{rd} is obtained as follows:

$$F_{\mathrm{rd}} = G_0 - \mathrm{G}\ \ (\mathrm{dB}) \qquad (A.16)$$

As this loss is generated during both transmission and reception, the value multiplied by 2 is applied to the system loss.

A.2.8.2 Measurement of loss of transmit path and receive path

The loss related to transmit and receive paths depends on actual installation conditions. The exact value will be known after the exact layout of the equipment at the site will be determined. Still, the standard measurement method described here provides a loss estimate that is comparable in a fair way among radar systems from different manufacturers.

A.2.8.2.1 Measurement diagram

Three measurement diagrams are available in line with the different configurations as described in Figure 2 to Figure 5.

In case of the dual polarisation independent transmitter type:

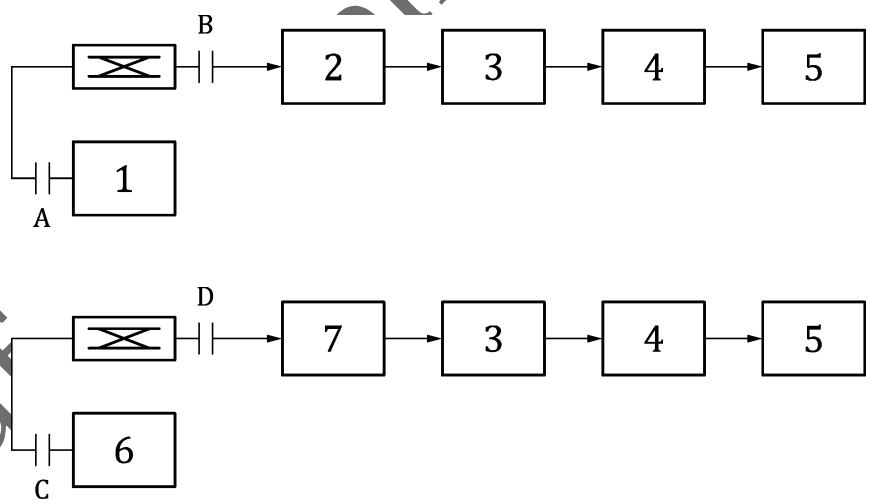

Key

1 Transmitter (H)
2 LNA (H channel)
3 Frequency conversion
4 Signal processor
5 PC
6 Transmitter (V)

[2] Measuring loss in a wet state using super water-repellent material remains a future task.

Draft Members' Review

© World Meteorological Organization, 2018

7 LNA (V channel)
A – B Transmit to receive return path (H pol.)
C – D Transmit to receive return path (V pol.)

Figure A.22 — Measurement diagram of loss of transmit path and receive path in case of the dual polarisation independent transmitter type

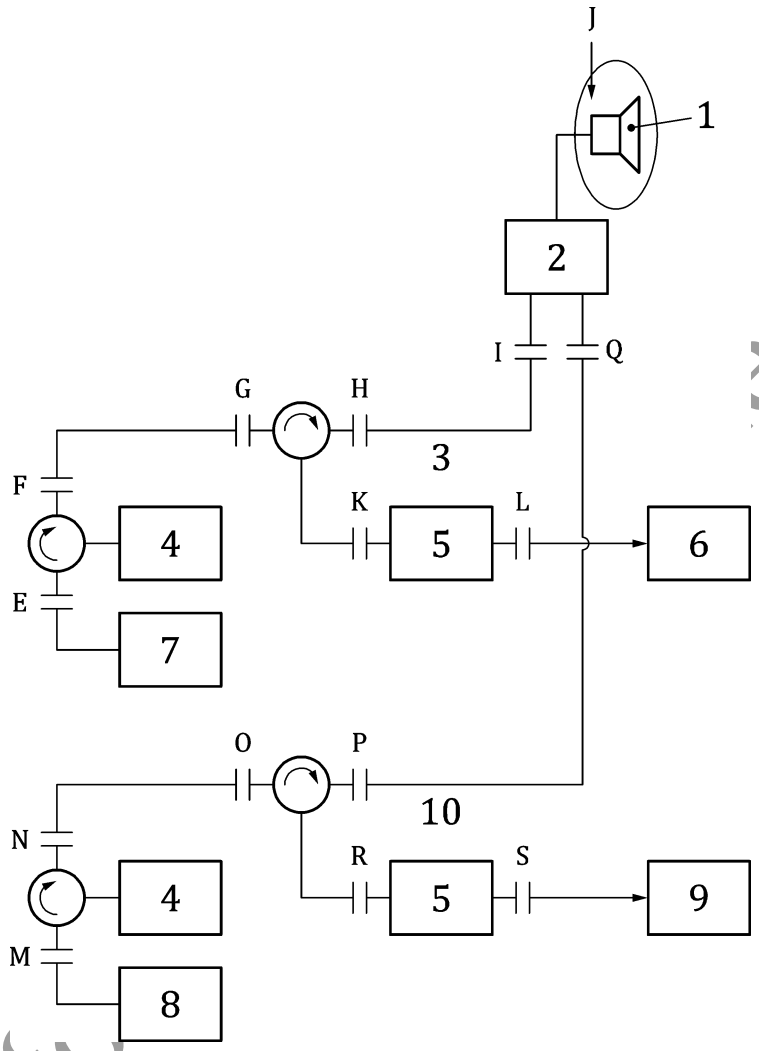

Key

1 Reflector (Horn)
2 Antenna pedestal
3 Horizontal polarisation (H channel)
4 Dummy load
5 TR limiter
6 LNA (H channel)
7 Transmitter (H)
8 Transmitter (V)
9 LNA (V channel)
10 Vertical polarisation (V channel)
E – F, G- H , I - J: Transmit path (H pol.)
M - N, O - P , Q – J: Transmit path (V pol.)
J - I , H – K, K – L: Receive path (H pol.)
J – Q, P - R, R – S: Receive path (V pol.)

Draft for review

© World Meteorological Organization, 2018

Figure A.23 — Measurement diagram of transmit/receive system loss of dual polarisation independent transmitter type

A.2.8.2.2 Measurement device

Table A.11 — Measurement devices

No.	Measurement devices name	Remarks
1	Signal generator	
2	Power meter	

A.2.8.2.3 Measurement method

Measurement is divided into several parts and measured values are summed together. First, for the Transmit to Receive return paths (H/V pol.): A – B and C – D, where the transmitter is directly connected to the receiver via a directional coupler (DC), the coupling loss of DC and cable loss are measured. Measurement of the loss of cables is the same as the method shown in Figure A.4.

Then for the transmit path, the loss values of each circulator in the H/V channels are independently measured. (Connect an SG at one end and a power meter at the other end in each section of measurement points shown with alphabets in Figure A.23). Also, for the receive path, the loss values of each TR limiter in the H/V channels are independently measured.

For the section I-J, Q-J, where the antenna related loss exists resulting from rotary joints and OMT, cover the horn aperture with a steel plate. Reflect the radio wave fully at the horn and measure the loss between I and J for the H-channel, Q and J for the V-channel, respectively, and divide the value by 2.

The waveguide length needs a common value used for calculation. In this document, 10 m is supposed to be the net length of the entire waveguide connecting all the equipment parts, under the assumption that the radar equipment will be installed right under the antenna. The waveguide loss for 10 m is then estimated from the specification of the waveguide model used.

However, when the distance between the antenna bottom and the transmit/receive (LNA) is within 3 m (as in case of the antenna mounted receiver type, for example) and this relation holds for the equipment regardless of radar site environments such as a building or tower, a loss value measured in the past installations can be used.

A.2.8.3 Measurement of matched filter losses

The matched filter losses are given by:

$$F_{\mathrm{mf}} = E_{\mathrm{RX,on}} / E_{\mathrm{RX,off}}$$

with

F_{mf} Matched filter losses
$E_{\mathrm{RX,on}}$ Received signal energy after the matched filter
$E_{\mathrm{RX,off}}$ Received signal energy without matched filter

NOTE For pulse compression matched filter losses are included in the pulse compression gain.

A.2.8.3.1 Measurement Diagram

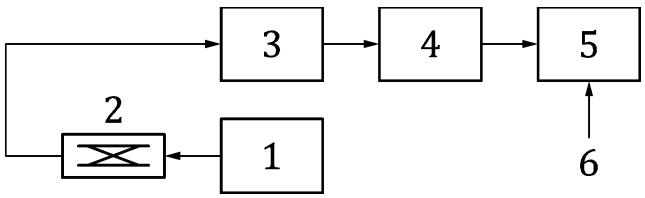

Draft for Members' Review

© World Meteorological Organization, 2018

Key

1 Transmitter
2 Coupler
3 TR limiter
4 Receiver
5 Signal processor
6 Matched filter control

Figure A.24 — Measurement of matched filter losses

A.2.8.3.2 Measurement Method

A sample of the transmitter signal taken via a coupler is injected into the TR limiter. If the power exceeds the maximum input level of the receiver LNA attenuators have to be added. The energy of the signal is measured by a dedicated algorithm hosted by the signal processor. $E_{RX,off}$ is measured with the all-pass matched filter and de-activated pulse compression (in case of a pulse compression radar)). $E_{RX,on}$ is measured with the filter matched to the transmitter pulse (including pulse compression in case of a pulse compression radar) and with activated pulse compression (in case of a pulse compression radar).

A.2.9 Phase stability

A.2.9.1 General aspects

Two alternative methods are described. One is only applicable for klystron and solid-state radars. The second can also be used for magnetron radars.

A.2.9.2 Measurement for klystron and solid-state radar

A.2.9.2.1 Measurement diagram

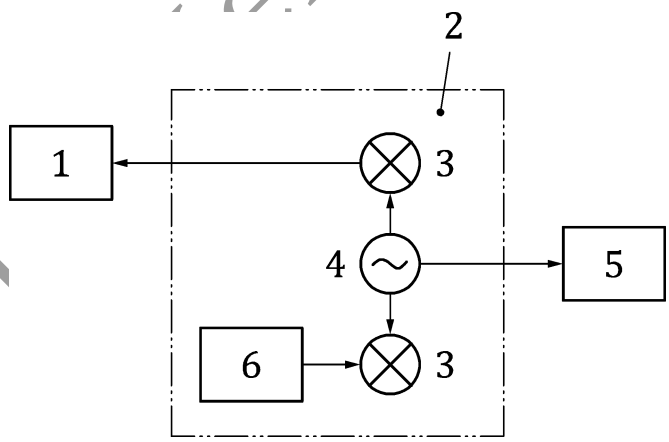

Key

1 Transmitter
2 Receiver
3 Mixer
4 STALO
5 Network analyzer
6 LNA

Figure A.25 — Measurement of phase stability

Draft for Members' Review

© World Meteorological Organization, 2018

A.2.9.2.2 Measurement device

No.	Measurement devices name	Remarks
1	Network analyzer	

A.2.9.2.3 Measurement method

Connect a network analyser to the STALO monitoring port as in Figure A.25. Tune the analyser to the carrier frequency. Then measure spectral power density at offsets from the carrier.

As in Figure A.26, when the measured values (in dBc/Hz) are obtained for each log scale, namely as 100 Hz, 1 kHz, 10 kHz, 1 MHz, calculate values for offset frequencies between them with log linear interpolation. Calculate $\int_a^b L(f)\mathrm{d}f$, an integral value between a=100 Hz to b=1 MHz as antilogarithm. Then S/N due to phase noise of this interval of integration is calculated as:

$$S/N = -10\log\left(2\int_a^b L(f)\mathrm{d}f\right) \tag{A.17}$$

where

2 is a factor of double side band.

Finally, convert this value into phase stability θ_{ps} as:

$$\theta_{\mathrm{ps}} = \frac{180}{\pi}\left(10^{-\frac{S/N}{10}}\right)^{0,5} \text{ (deg)} \tag{A.18}$$

When the network analyser has an integral calculation function within a user set period, this function can be used for direct calculation.

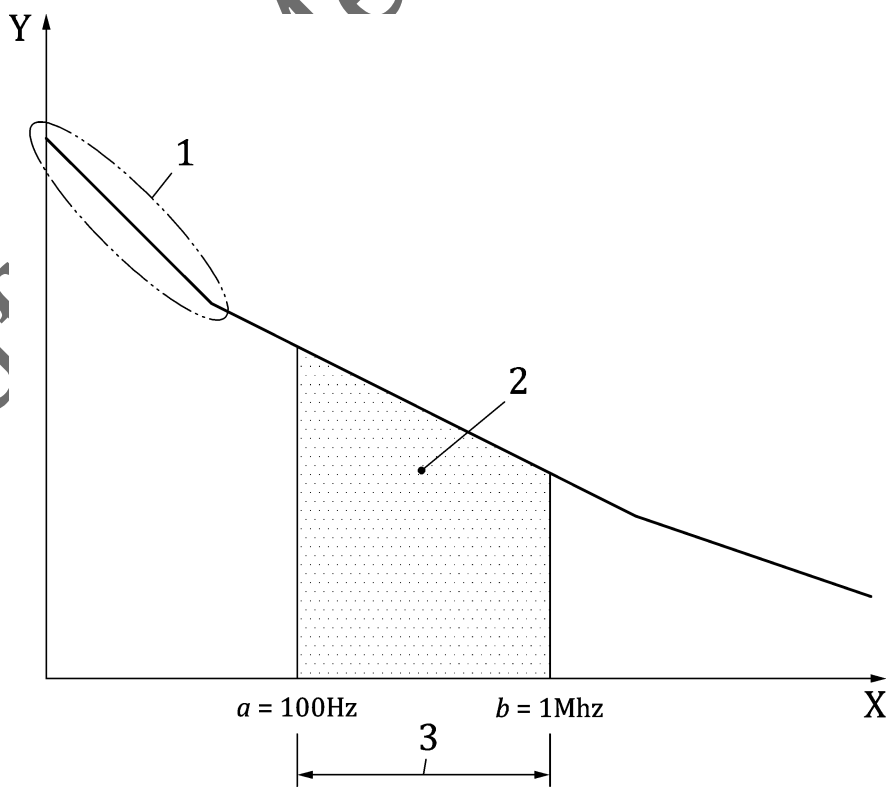

Key

Draft Members' Review

© World Meteorological Organization, 2018

1 Log linear interpolation
2 Phase stability within 100 Hz to 1 MHz
3 Interval of integration
X Offset frequency, in Hz, log scale
Y Phase noise, in dBc/Hz, as $L(f)$

Figure A.26 — Method for calculating phase stability

A.2.9.3 Measurement for magnetron, klystron and solid-state radar

A.2.9.3.1 Measurement diagram

Applies for magnetron radar but is also applicable to Klystron and Solid-state radar.

Draft for Members' Review

© World Meteorological Organization, 2018

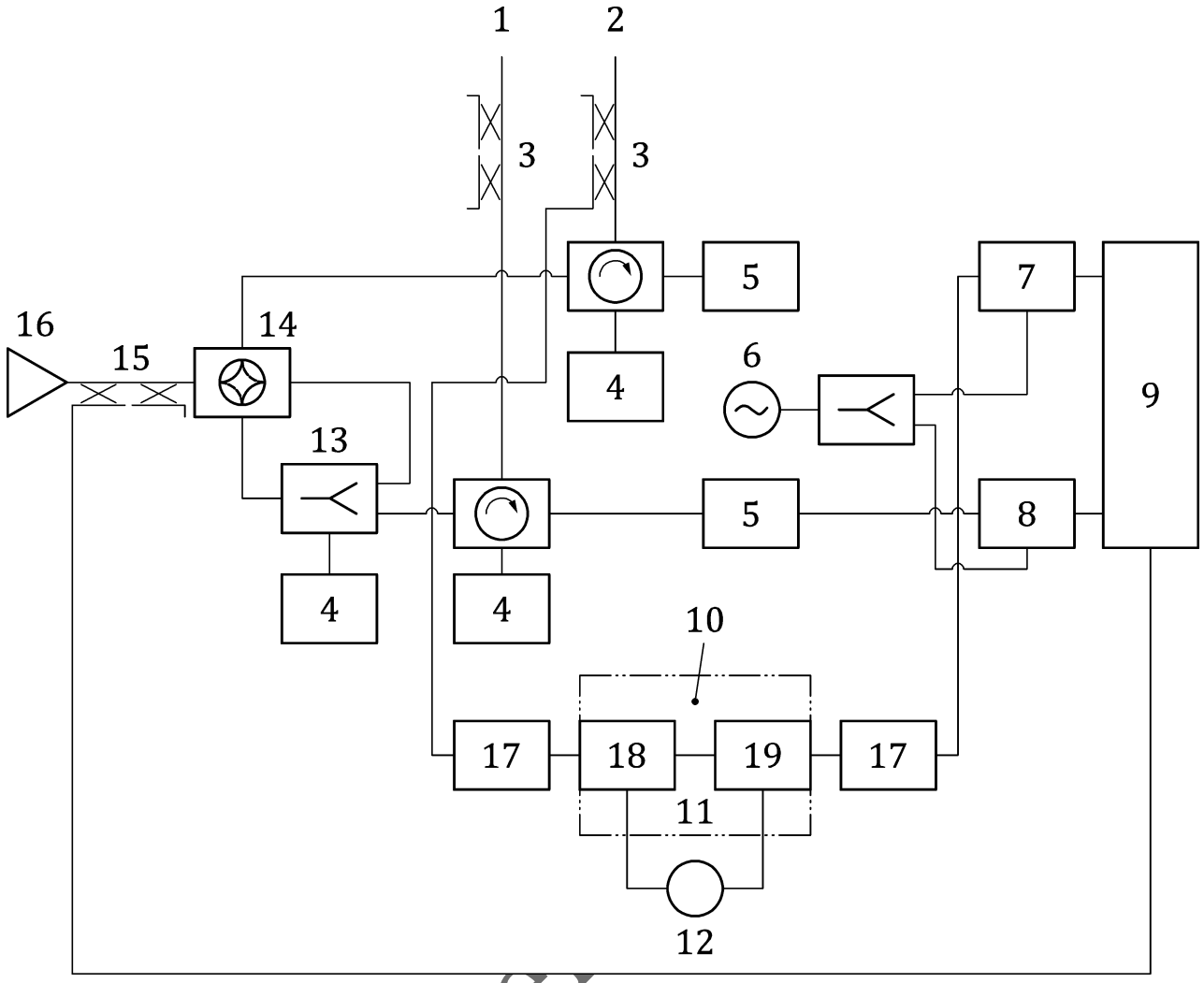

Key

1 Vertical
2 Horizontal
3 Coupler
4 Absorber
5 TR-limiter
6 STALO
7 Low noise front end + Down converter (horizontal)
8 Low noise front end + Down converter (vertical)
9 Signal processing
10 Fibre optic delay line
11 Optical interface
12 Fibre optic reel
13 Divider
14 RF switch
15 Transmit coupler
16 Transmitter
17 Attenuator
18 RF in
19 RF out

Figure A.27 — Block diagram of a dual pol radar system

Draft for Me

© World Meteorological Organization, 2018

A.2.9.3.2 Measurement device

No.	Measurement devices name	Remarks
1	Optical Delay Line including fibre optic reel	A fibre optic length of at least 6 km shall be used.

A.2.9.3.3 Measurement method

The fibre optic delay line will be inserted between the forward port of the system waveguide coupler and the input of the low noise front end. The system waveguide coupler is usually located directly behind the circulator. If needed additional attenuators shall be inserted at the input or output of the delay line. A general setup for a dual pol radar system can be seen in Figure A.26. Solid state or single polarisation radar systems can have different setups, but the general connections are usually the same.

The ratio *FR* between mechanical length of the fibre l and the radar distance r is given by:

$$FR = \frac{l}{r} = \frac{2}{n} = \frac{2}{1{,}467} = 1{,}363 \qquad \text{(A.19)}$$

Where n is the Group Index of Refraction (Group Delay) of the used fibre optic line. Using a fibre optic reel with a mechanical length of 6,12 km and n=1,467 will result in an equivalent radar distance of 4,5 km in this example. Depending on the length of the fibre optic reel the radar distance can be further extended.

The calculation of the phase stability is done by the signal processing unit and will be displayed by the integrated software tools which are used to control the radar.

A.3 Other key parameters

Other key parameters shown in Table 3 are sorted by the components of radar and with or without pulse compression method as follows.

Table A.12 — Measurement devices

Component	Measurement parameter	Applicability	Remarks	Reference
Transmitter	Unwanted emissions	Common		A.3.1
Antenna	Side lobe level	Common		A.3.2,A.2.3
	Beam direction co-alignment	Common		A.3.3, A.2.3
	Beam width matching	Common		A.3.4, A.2.3
	Maximum rotation speed	Common		A.3.5
	Acceleration	Common		A.3.6
	Antenna pointing accuracy	Common		A.3.7
Receiver	Dynamic range	Common		A.3.8
	Range side lobe	Pulse compression radar		A.3.9

Draft for Members' Review

© World Meteorological Organization, 2018

A.3.1 Unwanted emissions

A.3.1.1 Measurement diagram

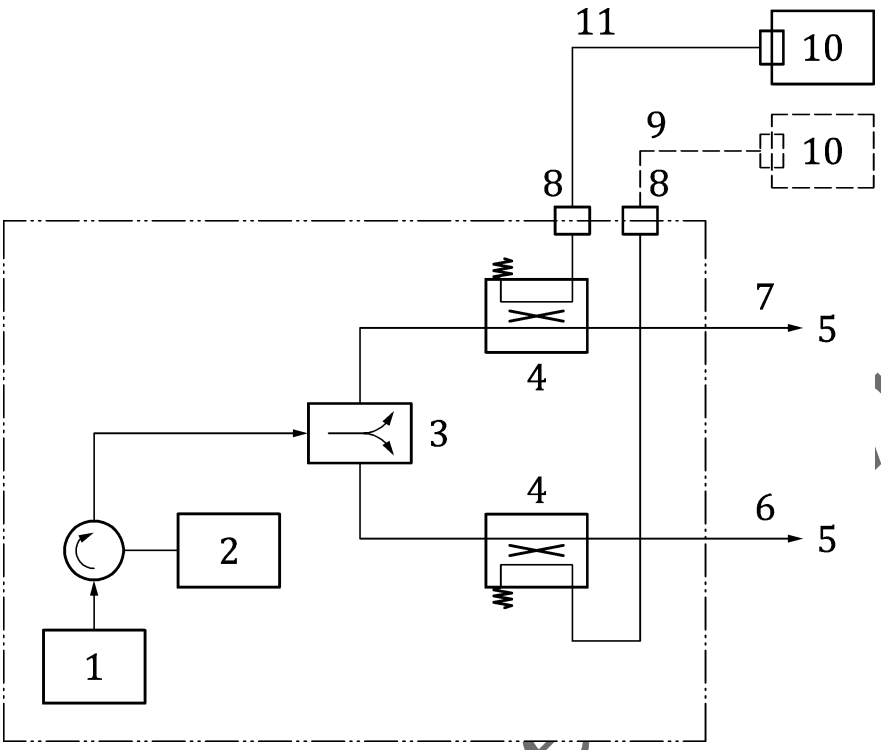

Key

1 Transmitter
2 Dummy load
3 3 dB power splitter
4 Directional coupler
5 To antenna pedestal
6 Vertical polarisation (V) channel
7 Horizontal polarisation (H) channel
8 Monitoring point for transmission power
9 Cable for measurement
10 Spectrum analyser
11 Cable for measurement

Figure A.28 — Measurement diagram of unwanted emissions

A.3.1.2 Measurement device

No.	Measurement instruments	Remarks
1	SG	
2	Spectrum analyser	

A.3.1.3 Measurement method

Connect an SG to the LNA input, and a spectrum analyser to the monitoring point of transmit power and measure transmit frequency spectrum. Unwanted emissions are measured as attenuation from the center frequency f_0, with ± A MHz away. Measurement shall be done for both H/V polarisations. For pulse compression radar, emission for both a long pulse and a short pulse shall be measured. It shall be confirmed that far away from ± A MHz points, emission level is kept lower than the specified B dB.

Draft for Member Review

© World Meteorological Organization, 2018

Alternative methods can be found in e.g. ITU-R M.1177-4.

A.3.2 Antenna side lobe

A.3.2.1 Measurement diagram

Refer to A.2.3.

A.3.2.2 Measurement device

Refer to A.2.3.

A.3.2.3 Measurement method

As antenna side lobe brings the mixing of reflected waves from directions other than the target spatial sampling volume, definition and measurement of side lobe level are needed. Measurement is performed with the 1st side lobe, evaluating the difference of its peak and main lobe peak level. Measurement is performed in sufficiently wide angles where the 1st side lobe appears, both for the horizontal and vertical planes.

It is assumed that a classical antenna pattern has an axial symmetry with respect to the main beam axis. A cheap way to assess at least partially that hypothesis is to move the antenna 180° in elevation (most modern antennas can do this) and compare if the meteorological echoes are more or less intense after that move.

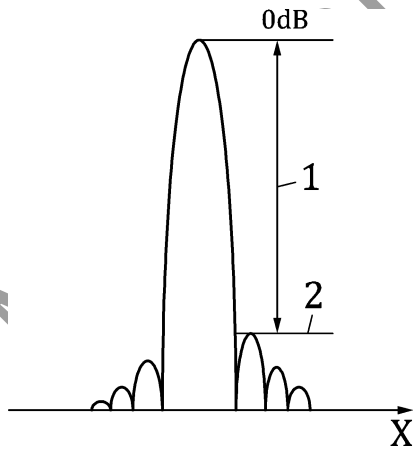

Key

1 Side lobe level ΔV_{pa}
2 First side lobe
X Horizontal/vertical angle

Figure A.29 — Measurement of antenna side lobe level

A.3.3 Beam direction co-alignment

A.3.3.1 Measurement diagram

Refer to A.2.3.

A.3.3.2 Measurement device

Refer to A.2.3.

Draft for Experts' Review

© World Meteorological Organization, 2018

A.3.3.3 Measurement method

To determine the beam direction co-alignment (*BDA*) the co-polar antenna diagrams as described in A.2.3 can be used. Estimate the azimuth angle of the co-polar peak of the horizontal channel ($Peak_{\mathrm{h}}$) Typically each peak deviates a little from 0 degree azimuth. Do the same for the vertical channel ($Peak_{\mathrm{v}}$). The beam direction co-alignment is then defined as:

$$BDA = Peak_{\mathrm{h}} - Peak_{\mathrm{v}} \text{ (deg)} \tag{A.20}$$

A.3.4 Beam width matching

A.3.4.1 Measurement diagram

Refer to A.2.3.

A.3.4.2 Measurement device

Refer to A.2.3.

A.3.4.3 Measurement method

To determine the beam width matching (*BWM*) the co-polar antenna diagrams as described in A.2.3 can be used. Estimate the antenna beam width for both polarisations as described in Figure A.8. In addition to the beam width at the -3 dB level the beam width can also be determined at e.g. the -10 dB level. The beam width matching is then defined as:

$$BWM = \theta_{\mathrm{h}} - \theta_{\mathrm{v}} \tag{A.21}$$

A.3.5 Maximum rotation speed

A.3.5.1 Measurement diagram

Antenna system is to be set up in a room large enough for full rotation.

A.3.5.2 Measurement device

No.	Measurement instruments	Remarks
1	Stop watch	

A.3.5.3 Measurement method

Rotating an antenna with the maximum speed and measure with a stopwatch the time the antenna takes to rotate N times. Letting the measurement time as t second, maximum rotation speed $R_{\max}$ is calculated as follows. N is typically set as 10.

$$R_{max} = 60\frac{N}{t} \tag{A.22}$$

A.3.6 Acceleration

A.3.6.1 Measurement diagram

Refer to A.3.5.

A.3.6.2 Measurement device

Refer to A.3.5.

Draft for Members' Review

© World Meteorological Organization, 2018

A.3.6.3 Measurement method

For the elevation acceleration, start with the antenna at the EL angle = 0 deg. Then measure t_{aEL}, the time it takes for the antenna to be driven to the EL angle = 90 deg. Likewise measure t_{aAZ}, the time it takes to move from 90 to 0 deg. Take the worst value as a measurement.

For the azimuth direction, rotate the antenna with the maximum velocity. Measure the time it takes for the antenna to stop completely.

Measurement is done with a stopwatch. Care should be taken than any overshoots are counted in.

A.3.7 Antenna pointing accuracy

A.3.7.1 Measurement diagram

Refer to A.3.5.

A.3.7.2 Measurement device

No.	Measurement instruments	Remarks
1	Laser pointer	Beam diameter/spread as narrow as possible. Has to be rigidly fixed on the antenna

A.3.7.3 Measurement method

Set up a small laser pointer, at least as small as not to influence the weight of the antenna system, rigidly on a horn or another part. The laser pointer also should have a diameter and divergence as narrow as possible.

Confront the antenna directly to the wall (see Figure A.30). First, fix an elevation angle at 0 deg. Then at the AZ angle = 0 deg, project the laser beam on to the wall. This projected point, p_{orig}, is to be marked on the wall. Because of divergence of the laser beam, this point is actually a circle with diameter of several milimeters. Therefore, draw parallel lines to determine the central point. Set the distance between the laser pointer and p_{orig} as h (in m). Then rotate the antenna in the AZ direction by 360 deg. Then project the beam again on to the wall. Record the projected point as $p_{\mathrm{rot,a}}$ in the same way as p_{orig}. Taking the difference between p_{orig} and $p_{\mathrm{rot,a}}$ as d (in m), calculate angular error θ_{az} as:

$$\theta_{\mathrm{az}} = \tan^{-1}\left(\frac{d}{h}\right) \tag{A.23}$$

Measure θ_{az} for 10 times. Let the standard deviation of 10 samples be defined as pointing accuracy for the AZ direction.

Draft for Members' Review

© World Meteorological Organization, 2018

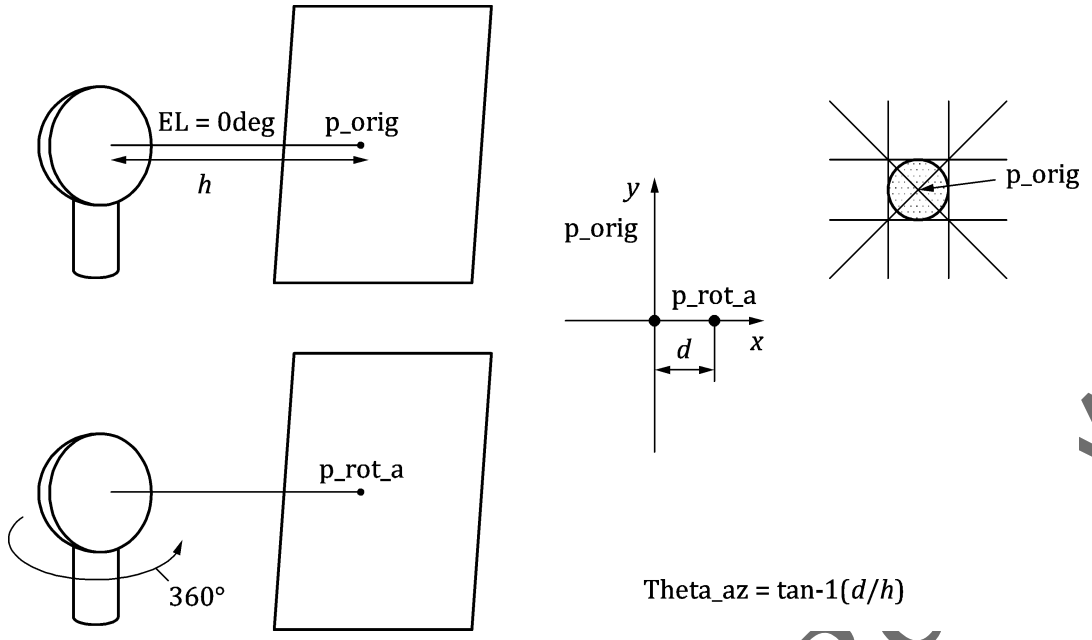

Figure A.30 — Antenna pointing accuracy (AZ)

Then fix an azimuth angle at 0 deg. Then at the EL angle = 0 deg, project the laser beam on to the wall. This projected point, p_{orig}, is again marked on the wall (the same way as previously). Then move the antenna in the EL direction by +90 deg. Then move it by -90 deg, project the beam again on to the wall. Record the projected point as $p_{\mathrm{rot,e}}$ in the same way as p_{orig}. Taking the difference between p_{orig} and $p_{\mathrm{rot,e}}$ as d' (in m), calculate angular error θ_{EZ} as:

$$\theta_{\mathrm{EZ}} = \tan^{-1}\left(\frac{d'}{h}\right) \tag{A.24}$$

Measure θ_{EZ} for 10 times. Let the standard deviation of 10 samples be defined as pointing accuracy for the EL direction.

Draft for Members' Review

© World Meteorological Organization, 2018

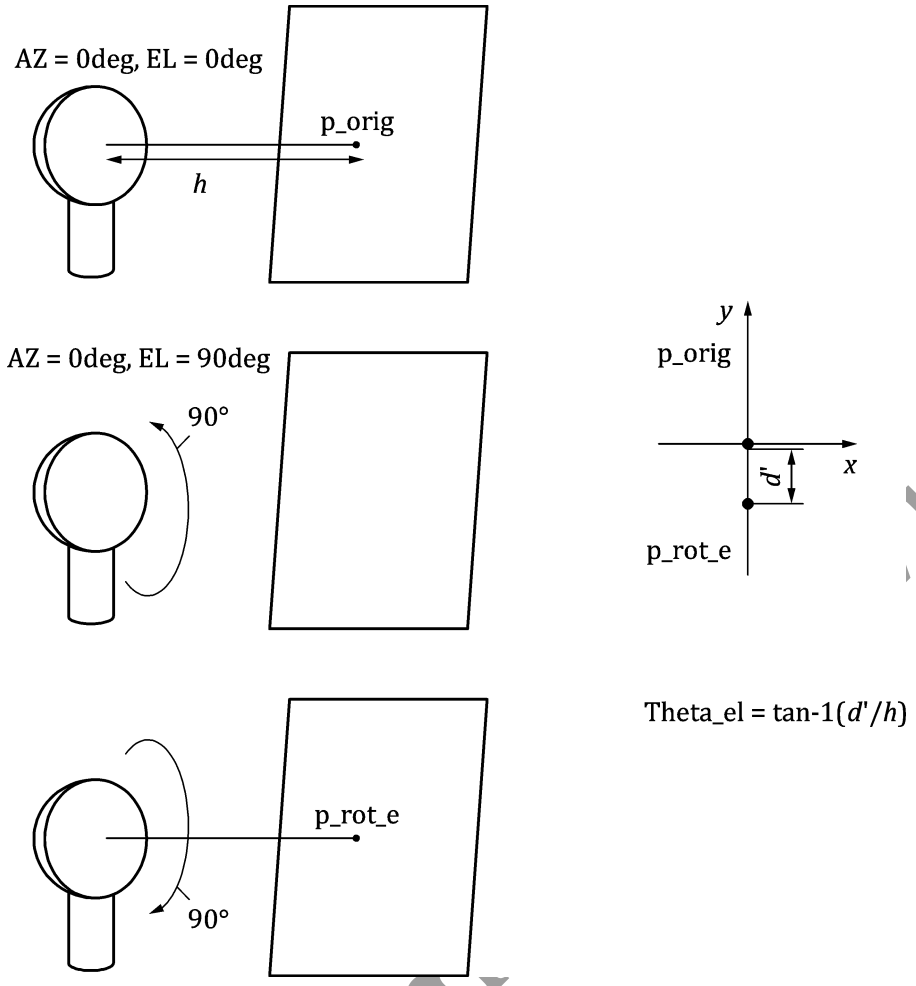

Figure A.31 — Antenna pointing accuracy (EL)

A.3.8 Dynamic range

A.3.8.1 Measurement diagram

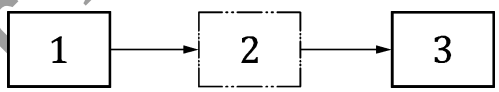

Key

1 Signal generator
2 Analogue and digital receiver
3 Signal processor

Figure A.32 — Measurement diagram of dynamic range

A.3.8.2 Measurement device

No.	Measurement instruments	Remarks
1	SG	

A.3.8.3 Measurement method

Connect an external highly stable (amplitude) signal generator with a calibration line and wide dynamic range to the receiver. Inject a signal with the SG and read the equivalent power at the output given by the signal processor. Start with a value that is below the minimum detectable signal and then increase

Draft for Mem... iew

the injected signal by equidistant steps of e.g. 1 dB or smaller. Stop when the power level of the SG is 2-3 dB larger than the 1 dB compression point of the receiver.

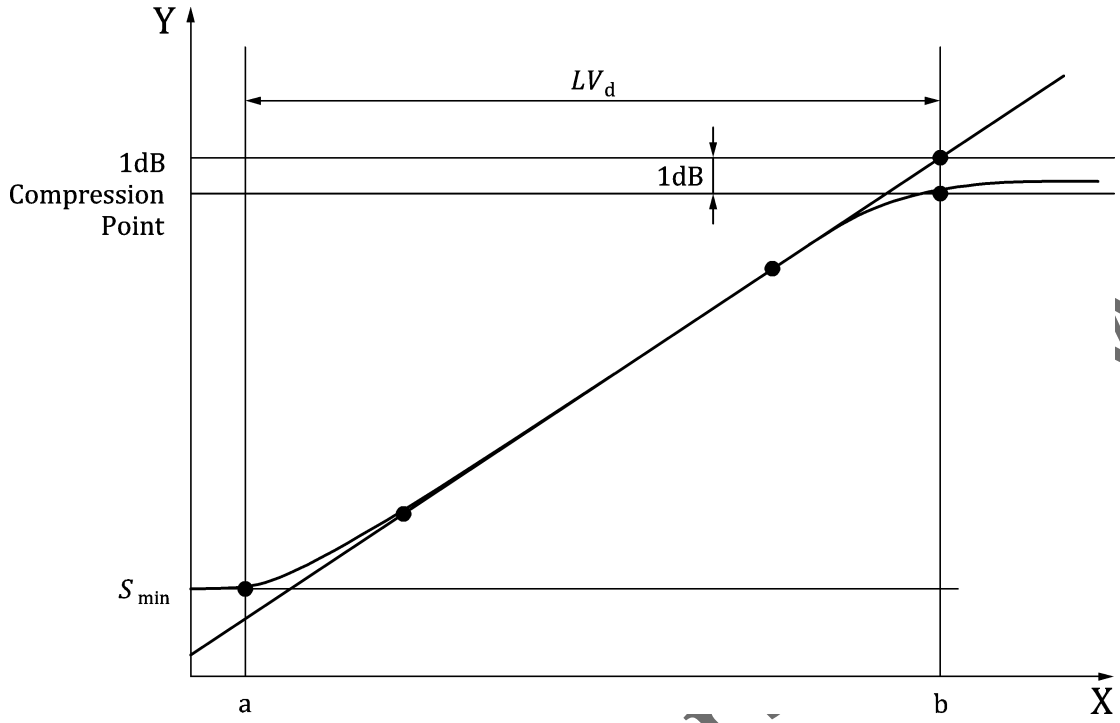

Key

LV_d Dynamic range
X Input power, in dBm
Y Output power, in dBm

Figure A.33 — Dynamic range

Measure LV_d, the level between 1 dB compression point and S_{min} in accordance with Figure A.32 (difference between point a and b).

A.3.9 Range side lobe

A.3.9.1 Measurement method

Range side lobe is measured in the same method as shown in A.3.2. Figure A.34 shows an example of pulse wave compressed at the receiver.

As range side lobes appear near the center of the compressed main pulse, read V_m, peak voltage value of the main pulse, and V_s, peak voltage value of the range side lobe, on A-Scope. The range side lobe is to be taken from the maximum peak value in a range wider than pulse width after pulse compression, which is $\Delta t > \tau_{pc}$. The range side lobe ΔV_p is calculated in units of dB as below.

$$\Delta V_{pr} = 10\log\left(\frac{V_m}{V_s}\right) \text{ (dB)} \quad \text{(A.25)}$$

Draft for Members' Review

© World Meteorological Organization, 2018

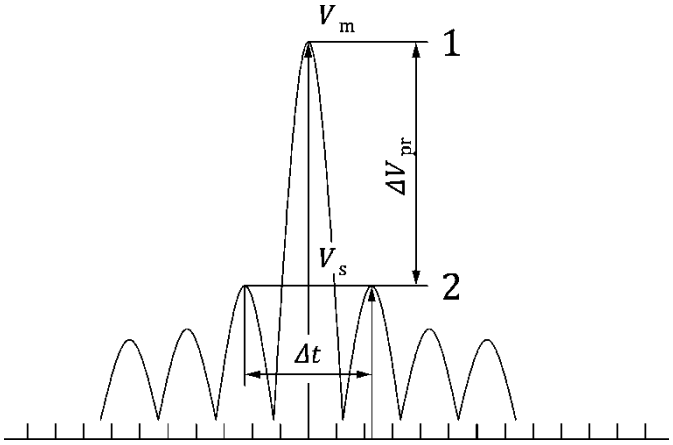

1 Peak pulse voltage
2 Peak range side lobe voltage

Figure A.34 — Measurement method of range side lobe

A.3.9.2 Measurement device

No.	Measurement instruments	Remarks
1	A-scope	

Draft for Members' Review

© World Meteorological Organization, 2018

Annex B
(informative)

Sample radar specifications

Below is an example of common specifications of weather radar at the current market (as of 2016).

Table B.1 — Common specifications of weather radar

System performance requirements for weather radar		**Category**		
Fundamental parameters	*Criteria*	*Radar 1 (S-Band)*	*Radar 2 (C-Band)*	*Radar 3 (X-Band)*
Sensitivity[a]	Minimum detectable reflectivity shall be A dBz or less at a distance up to B km, where max unambiguous velocity of more than ±48 m/s is attained with 2-stagger f_{PRF} of either 2:3 or 3:4 or 4:5	< 18; 240	< 10; 120	< 10; 60
Spatial resolution	Beam resolution shall be θ_H and θ_V (in deg) or less	< 1	< 1	< 1
	Range resolution shall be ΔR (in m) or less	≤ 150	≤ 150	≤ 150
	Antenna side lobe shall be			
	ΔV_{pa} (in dB) or less	< -25	< -25	< -25
	Range side lobe shall be			
	ΔV_{pr} (in dB) or less for pulse compression radar	< -50	< -50	< -50
Phase stability	Phase stability should be	0,3	0,6	1,2
	θ_{ps} (in deg) or less			
Accuracy of dual polarisation measurement	Cross polarisation ratio shall be XPD_{sys} (in dB) or less	< -35	< -35	< -35
Other key parameters	*Criteria*			

Draft for Members' Review

© World Meteorological Organization, 2018

Maximum rotation speed	Antenna maximum rotation speed shall be R_{max} (in rpm) or more	≥ 6	≥ 6	≥ 6
Acceleration	As EL antenna acceleration, elevation drive time from 0 to 90 (in deg), and 90 to 0 (in deg) shall be less than t_{aEL} (in sec)	< 10	< 10	< 10
	As AZ antenna acceleration, time from maximum speed to complete stop shall be less than t_{aAZ} (in sec)	< 3	< 3	< 3
Antenna pointing accuracy	Antenna pointing accuracy shall be			
	θ_{AZ} (in deg) or less, and θ_{EL} (in deg) or less	< 0,1	< 0,1	< 0,1
Dynamic range	Dynamic range shall be LV_d (in dB) or more	> 100	> 100	> 100
Unwanted emissions[b]	The level of unwanted emissions shall be A dB or less at B MHz away from the central frequency f_0 (in MHz).	< -60; 5	< -60; 5	< -60; 5

[a] For a typical pulse compression radar the minimum detectable reflectivity at short ranges cannot be calculated from the given values.

[b] National requirements might request different values.

Draft for Members' Review

© World Meteorological Organization, 2018

Annex C
(informative)

Recording of measurement results

Table C.1 — Pulse width

System	Pulse width τ (in μs)	Accuracy	Remarks
Horizontal polarisation channel		±1/10 μs	
Vertical polarisation channel		±1/10 μs	

Table C.2 — Peak power

System	P_t (in dBm)	P_m (in dBm)	P_m' (in dBm)	L_c (in dB)	L_t (in dB)	Accuracy	Remarks
Horizontal polarisation channel						±1/10dB	
Vertical polarisation channel						±1/10dB	Only in case of dual polarisation

Table C.3 — Antenna Gain

System	Frequency (in MHz)	Gain (in dB)	Remarks
Horizontal polarisation channel			
Vertical polarisation channel			Only in case of dual polarisation

Table C.4 — Beam width

System		Beam width (in deg)	Remarks
Horizontal polarisation channel	H plane		θ_H
	V plane		θ_V
Vertical polarisation channel	H plane		Only in case of dual polarisation
	V plane		

Draft for Members' Review

© World Meteorological Organization, 2018

Table C.5 — Cross polarisation isolation

Polarisation	**Pattern**	**Measured *XPD* (in dB)**
Horizontal polarisation transmission	XPD_{h}	
Vertical polarisation transmission	XPD_{v}	

Table C.6 — Recording of measurement of H/V isolation

Port	**Measurement**	**Measured level (in dB)**
Horizontal	$LV_{\mathrm{diff-h}}$	
Vertical	$LV_{\mathrm{diff-v}}$	

Table C.7 — Pulse compression

System	**Power level (in dB)**		***SNR* (in dB)**		**Pulse compression gain (in dB)**	**Remarks**
Horizontal polarisation channel	S_{off}		SNR_{off}			
	N_{off}					
	S_{on}		SNR_{on}			
	N_{on}					
Vertical polarisation channel	S_{off}		SNR_{off}			only in case of dual polarisation
	N_{off}					
	S_{on}		SNR_{on}			
	N_{on}					

Table C.8 — Sampling interval of received signal

System	**sampling interval (in µs)** t_{s}	**Sampling length (in m)** L_{si}	**Remarks**
Horizontal polarisation channel			
Vertical polarisation channel			Only in case of dual polarisation

Draft for Members' Review

© World Meteorological Organization, 2018

Table C.9 — Receive pulse width (pulse compression radar)

System	Pulse width (in µs)	Remarks
Horizontal polarisation channel		
Vertical polarisation channel		Only in case of dual polarisation

Table C.10 — Radome loss

System	Radome transmission loss (in dB)	Remarks
Horizontal polarisation channel		
Vertical polarisation channel		only in case of dual polarisation

Table C.11 —Tranmit/Receive path loss for dual polarisation independent transmitter type (refer to Figure A.22)

	Item	Measurement method	Result
1	Transmit to Receive return path	(1) Measure the coupling loss of DC and cable loss between A and B (a) dB (2) Measure the coupling loss of DC and cable loss between C and D (b) dB	(H): a = dB (V): b = dB
2	Transmit path	(1) Measure the loss between E and F. (c) dB (2) Measure the loss between G and H. (d) dB (3) Cover the horn aperture with a steel plate. Reflect the radio wave fully at the horn and measure the loss between I and J and divide the value by 2. (e) dB (4) Measure the loss between M and N. (f) dB (5) Measure the loss between O and P. (g) dB	(H): c+d+e = dB (V): f+g+h = dB

Draft for Members' Review

© World Meteorological Organization, 2018

		(6) Cover the horn aperture with a steel plate. Reflect the radio wave fully at the horn and measure the loss between Q and J and divide the value by 2. (h) dB	
3	Receive path	(1) Measure the loss between H and K. (i) dB (2) Measure the loss between K and L. (j) dB (3) Measure the loss between P and R (k) dB (4) Measure the loss between R and S (l) dB	(H): i+j = dB (V): k+l = dB
4	Total	Sum all the loss values for H/V (1 to 3 for each H/V)	(H): dB (V): dB

Table C.12 — Matched filter losses

Matched filter losses (in dB)	**Remarks**
F_{mf}	For pulse compression matched filter losses are included in the pulse compression gain.

Table C.13 — Unwanted emissions

Pulse	**Polarisation**	**Separation from f_0**	**Measurement**
Short pulse	H	+A MHz	
		-A MHz	
	V	+A MHz	
		-A MHz	
Long pulse (in case of pulse compression radar)	H	+A MHz	
		-A MHz	
	V	+A MHz	
		-A MHz	

Draft for Members' Review

© World Meteorological Organization, 2018

Annex D
(informative)

Recommended maintenance and calibration actions

NOTE Always follow the manufacturer's instructions for maintenance procedures and intervals for a given system.

Table D.1 — Recommended maintenance and calibration actions

Equipment	Item	Method	Recommended time interval	Procedure		
				Calibration	Monitoring	Maintenance
System	Waveguide attenuation	Test signal generator and power meter	During commissioning	X		
	System noise	Power measurement in a spatial region without backscattering (high elevation, large distance)	Every volume scan	X	X	
	BITE check / status check	Check the alarm and status of respective equipment by BITE system window	Daily		X	
			Monthly (if not continuously monitored)			X
	Visual check	Check the visual appearance of all equipment.	Half-yearly (or during each site visit)			X
	Site safety systems	Check the site safety interlock circuits such as emergency shutdown switches.	Half-yearly			X
	Cooling Fan	Check the condition of cooling fan.	Half-yearly (or during each site visit)			X
			Daily		X	
	DC Voltage	Measure the DC voltage of power supply in the respective equipment.	Half-yearly			X
			Daily		X	
	VSWR	Measure the VSWR using power meter	Yearly			X
			Daily		X	

Draft for Members' Review

© World Meteorological Organization, 2018

	Air Filter Cleaning	Cleaning of the air filter of respective equipment.	Half-yearly of when necessary			X
Antenna / Antenna Controller	Antenna gain and dry radome attenuation	Far-field test rig, near-field test rig, sun, with radome where possible	At the manufacturer	X		
	Beam width	Far-field test rig, near-field test rig, sun, with radome where possible	At the manufacturer	X		
	Positioning Accuracy	Measure the antenna positioning accuracy by means of the sun	Half-yearly (using a sun tracking tool)			X
			Daily (based on sun hits)		X	
	Sound check	Check the sound of mechanical gear and motor.	during each site visit			X
	Rotation Speed	Measure the antenna rotation speed.	Half-yearly			X
			Daily		X	
	Lubricant Quantity	Check the lubricant quantity.	Half-yearly (or during each site visit)			X
	Lubricant colour	Check the lubricant colour.	Half-yearly (or during each site visit)			X
	Slip-ring Cleaning	Cleaning of the slip-ring and checking the condition of the brush.	Every 1-5 years			X
	Lubricant Replace	Replace the lubricant of pedestal.	Yearly			X
	Grease Supply	Insert the grease of pedestal.	Yearly			X
	Limit Switch Function Check	Check the limit switch function.	Yearly			X
Dehydrator[a]	Status check	Check the status of the dehydrator	Daily		X	
Transmitter	Pulse Repetition Frequency (f_{PRF})	Measure the f_{PRF} using detector and oscilloscope.	Yearly			X
			Daily		X	

Draft for Members' Review

© World Meteorological Organization, 2018

	Transmitted Frequency	Measure the frequency using frequency counter or spectrum analyzer. In the case of solid state type, short pulse and chirp pulse should be measured using spectrum analyzer.	After installation and half-yearly	X		X
	Pulse Width	Measure the pulse width using detector, 3dB attenuator, and oscilloscope.	Half-yearly	X		
	Transmitted Power	Measure the transmit power using power meter.	Half-yearly	X		
			Daily		X	
	Major transmitter component replacement	Replace the electronic tube such as magnetron or klystron. In the case of solid state type, no item is required to replace.	Typically every ~5 years (replace)			X
Receiver / Signal Processor	Receiver amplification (external measurement)	Test signal generator and power meter	Half-yearly	X		
	Dynamic filter attenuation (matched filter loss)	Direct feeding of the emitted signal, power comparison with/without filter	During commissioning	X		
	Receiver single point calibration	Internal reference signal (if available)	Every volume scan (optional)	X	X	
			Half-yearly	X		
	Dynamic Range	Measure the dynamic range using the signal generator.	Yearly			X
	Minimum Detectable Sensitivity	Measure the minimum detectable sensitivity using signal generator.	Yearly			X
Radome	Rain Leaking	Check that rain leaking does not	Half-yearly (or during each site			X

Draft for Members' Review

© World Meteorological Organization, 2018

		occur.	visit)			
	Radome condition	Check the condition of the radome (e.g. coating)	Half-yearly			X
		Cleaning of radome	Every 5 years or more frequently, if required			X
[a] If liquid water condenses inside the waveguide, electrical sparks can develop, which lead to radar malfunction and possible damage to the electronics; the dehydrator role is to keep the inside of the waveguide dry						

Draft for Members' Review

© World Meteorological Organization, 2018

Annex E
(informative)

Radar data exchange

Weather radars are part of the Global Observing System and exchange of volume scan radar data will contribute to improved surveillance capability, longer lead time for nowcasts and severe weather warnings and improved numerical weather prediction. Quality control and extensive data processing is required for hydrological and climate applications.

To facilitate the downstream processing and exchange of both radar volume scan data and derived surface precipitation products, the data shall be properly described with respect to

— how it was collected,

— how it was quality controlled, and

— its quality.

The World Meteorological Organization is developing a weather radar data exchange format and is developing an information model, a data model and file format(s) that will include data quality metrics.

Draft for Members' Review

© World Meteorological Organization, 2018

Annex F
(informative)

Other radar systems

F.1 Phased-array weather radar

Phased-array weather radar (PAWR) is roughly classified into 2 categories. One is the imaging radar type, which performs point-by-point rapid scanning within a limited observation area [20]. Although antenna rotation speed is important, its system performance can be measured with the same criteria (fundamental parameters and other key parameters) explained in Clause 6. The other type emits electronic beams covering multiple elevation angles simultaneously and separates them by digital beam forming (DBF) techniques on the receiver side [21;22;23].

For this type of PAWR, a new item shall be added to fundamental parameters, namely 3-dimensional volume observation speed, which can be expressed as the number of elevation angles radar can process at the same time. However, as this number increases, transmit power P_t and antenna gain G_t will decrease accordingly. Regarding this trade-off between improved rapidness and decreased sensitivity, a radar operator can take a scanning strategy where for high elevation angles beams are widened to put priority on rapidness, while for low elevation angles beams are narrowed to put priority on sensitivity.

Table F.1 — Fundamental parameter for phased-array weather radar

Parameter category	Purpose	Value
3-dimensional volume observation speed	Determines how fast the entire 3-dimensional volume can be scanned.	The number of elevation angles processed simultaneously: The bigger the value is, the more rapid 3-dimensional scanning.

Also, for other key parameters, a new item shall be added, namely DBF capability to suppress ground clutter. Different from conventional ground clutter suppression with spectrum-based techniques, suppression with DBF techniques which insert null into unwanted wave directions shall be evaluated.

Table F.2 — Other key parameter(s) for phased-array weather radar

Parameter category	Purpose	Value
Ground clutter suppression level with DBF techniques	Determines how well DBF can distinguish weather echoes from ground clutter.	The bigger the value is, the greater ground clutter is suppressed with DBF.

F.2 Micro rain radar

The micro rain radar (MRR) is a vertically pointing Doppler radar that derives profiles of drop size distributions (DSDs) using the relation between terminal fall velocity and drop size [24]. DSDs can be used to reduce one of the major measurement uncertainties of the weather radar (WR). Since the DSD in the WR measuring volume can be retrieved, the MRR provides a basis for real time adjustment of the Z-R-relation and of the WR's calibration [25]. Another typical MRR application is determining the

Draft for Members' Review

© World Meteorological Organization, 2018

melting layer height, which shows up not only as an increase in backscattered power but also (and often more clearly) as a jump in fall velocity.
The MRR, implemented as a solid state 24 GHz FM-CW radar, has a transmit power of a few Milliwatt with a typical sensitivity of 3 dBz at z = 1 km, Δz = 30 m, Δt = 10 s with z, Δz, and Δt measuring height, height resolution and time resolution. A major retrieval error is caused by the vertical wind because of its impact on the terminal fall velocity. A favourable set-up consists of a MRR and a rain gauge for controlling the MRR calibration.

F.3 Terminal Doppler Weather Radar (TDWR)

Terminal Doppler Weather Radar (TDWR) is a kind of meteorological radar to detect microbursts and shear lines around airport and issue the alert information to the ATC controller in real time. A downburst with its outburst wind zone extending 4 km or less in horizontal direction is called a "microburst" [26]. A microburst (MB) is a small but harmful phenomenon producing bursts of outward winds which are strongly divergent near the surface. The intense winds caused by a MB often last only for 2 min to 5 min. Shear lines produced by gust fronts, the leading edge of the diverging air mass caused by a downdraft, or convergence lines, the interface of warm and cold air masses, are also hazardous. A shear line may be several kilometres or longer, lasts for dozens of minutes, and produces sudden changes of wind speed.

TDWR is a typically C-band Doppler radar with large parabolic antenna of approximately 7m or more of diameter. Generally speaking, TDWR can observe wind direction and wind speed under only rainy weather conditions. In case that airport exist in topography where turbulences are likely to occur, TDLs (Terminal Doppler LIDAR) are sometimes used as well as TDWR for clear air conditions. Refer to Annex D about TDL.

F.4 Terminal Doppler LIDAR (TDL)

TDL (Terminal Doppler LIDAR) is a ground-based remote sensing system using a Laser Beam instead of Radio/Microwave. TDL radiates the pulse-modulated laser into the air and receives the back-scattered light from aerosol. The moving speed of the aerosol or atmospheric wind speed can be calculated by the frequency analysis of the received signals, because the signals from moving object have Doppler speed components according to the object speed.

TDL measures the wind motion within a range of 7 km at least, 15 km typical in horizontal, up to the atmospheric boundary layer in vertical. Laser beam scanning with repeated pulse radiation can measure the range and direction to the object. TDL can measure the wind speed and direction under a clear weather condition. The observation range is reduced with the reduction of the visibility range such as rainy conditions.

TDLs are used as a valuable supplement to TDWR (Terminal Doppler Weather Radar) observations, since they have complimentary performance with respect to precipitation. TDLs perform best in clear air conditions when TDWR receives no or less signals. On the other hand, when precipitation limits TDL observations, TDWR performs optimally.

F.5 Cloud radar

Cloud radar with millimetre wave such as Ka-band, W-band are excellent tool to observe cloud and fog whose particle size are far small than that associated with precipitation. Cloud radar can observe the formation process of thundercloud that generates torrential rain, and it is expected to forecast heavy rain just before its occurrence. The latest cloud radar has a high sensitivity of approximately -20 dBz or less at 20 km distance, Doppler observation and dual polarisation observation mode.

Draft for Members' Review

© World Meteorological Organization, 2018

F.6 Small size radar system

Generally speaking, there is a small type of radars besides on a standard type (see the description of 1 degree beam width radar in Clause 5) particularly used on the X-band because it can reduce a cost of equipment, construction fee, and it is easy to carry.

Although X-band radar has inevitable issue on radio attenuation by rainfall, it could cover by using more than two small radars with a low cost to put at the other side for observing a whole area. Dual radar system can observe two-dimensional (2D) velocity precisely, and triple radar system can observe 3D velocity.

Antenna rotation speed of both azimuth and elevation scans can ease restriction by using the light and small antenna. It is possible to increase f_{PRF} by focusing on short-range observation (ex. 30 km) and to accurate observation of short range in high rotation speed as same as a standard radar.

Furthermore, time resolution would be improved by a high-speed rotation that can shorten the data output interval. It provides high refresh rate to users to make it convenient for short time phenomenon observation such as tornado and torrential rainfall.

Draft for Members' Review

© World Meteorological Organization, 2018

Bibliography

[1] WMO, 2014: WMO No.-8, Chapter 7, CIMO-Guide (http://library.wmo.int/opac/doc_num.php?explnum_id=3185)

[2] Probert-Jones, J.R., 1962: The radar equation in meteorology. Quarterly Journal of the Royal Meteorological Society, 88:485–495.

[3] Doviak, R.J. and D.S. Zrnic, 1993: Doppler Radar and Weather Observations. Second edition, Academic Press, San Diego.

[4] Joe, P. and S. Lapczak, (2002): Evolution of the Canadian Operational Radar Network, ERAD 2002

[5] Seliga, T.A. and V.N. Bringi, 1976: Potential use of radar differential reflectivity measurements at orthogonal polarizations for measuring precipitation. Journal of Applied Meteorology, 15:69–76.

[6] Vollbracht, D.; Sartori, M.; Gabella, M., 2014: Absolute dual-polarization radar calibration: Temperature dependence and stability with focus on antenna-mounted receivers and noise source-generated reference signal. In Proceedings of the 8th European Conference on Radar in Meteorology and Hydrology (ERAD2014), Garmisch-Partenkirchen, Germany, 1–5 September 2014; pp. 91–102.

[7] Reimann J., 2013: On fast, polarimetric non-reciprocal calibration and multi-polarization measurements on weather radars, PhD dissertation, DLR and Technische Universität Chemnitz, ISRN DLR-FB-2013-36, ISSN 1434-8454, pp. 161

[8] Gabella M., Sartori M., Progin O., Germann U., 2013: Acceptance tests and monitoring of the next generation polarimetric weather radar network in Switzerland, Proc. IEEE Int. Conf. Electromagn. Adv. Appl., Torino, Italy, 211-214.

[9] Kumagai, H., T. Kozu, M. Satake, H. Hanado, and K. Okamoto, 1995: "Development of an active radar calibrator for the TRMM Precipitation Radar," IEEE Trans. Geosci. Remote Sens., vol. 33, pp. 1316–1318.

[10] Schmidt, K., M. Schwerdt, N. T. Ramon, G. C. Alfonzo, B. Döring, S. Raab, J. Reimann, D. Rudolf, J. W. Antony, 2015: Verification of the Sentinel-1A SAR Instrument Calibration using active and passive Point Targets, Wave Propagation and Scattering in Communications, Microwave Remote Sensing and Navigation, Chemnitz, Germany.

[11] Gabella M., Sartori M., Progin O., Germann U., Boscacci M., 2010: An innovative instrumentation for checking electromagnetic performances of operational meteorological radar, Sixth European Conference on Radar meteorology - ERAD2010, Sibiu, Romania, 263-269.

[12] Gabella, M.; Boscacci; Sartori, M.; Germann, U. Calibration accuracy of the dual-polarization receivers of the C-band Swiss weather radar network, Atmosphere, **2016**, *7*, 76, pp. 10.

[13] Holleman, I.; Huuskonen, A.; Kurri, M.; Beekhuis, H. Operational monitoring of weather radar receiving chain using the Sun. *J. Atmos. Ocean. Technol*. **2010**, *27*, 159–166.

[14] Holleman, I.; Huuskonen, A.; Gill, R.; Tabary, P. Operational monitoring of radar differential reflectivity using the Sun. *J. Atmos. Ocean. Technol*. **2010**, *27*, 881–887.

Draft for Members' Review

© World Meteorological Organization, 2018

[15] Gabella, M.; Sartori, M.; Boscacci, M.; Germann, U. Vertical and Horizontal Polarization Observations of Slowly Varying Solar Emissions from Operational Swiss Weather Radars. *Atmosphere* **2015**, *6*, 50–59.

[16] Huuskonen, A.; Kurri, M.; Holleman, I. Improved analysis of Solar signals for differential reflectivity monitoring. *Atmos. Meas. Tech.* **2016**, *9*, 3183–3192.

[17] Leone, D.A., R.M. Endlich, J. Petriceks, R.T.H. Collis and J.R. Porter, 1989: Meteorological considerations used in planning the NEXRAD network. Bulletin of the American Meteorological Society, 70:4–13.

[18] Heiss, W.H., D.L. McGrew and D. Sirmans, 1990: NEXRAD: Next generation weather radar (WSR-88D). Microwave Journal, 33(1):79–98.

[19] Skolnik, M.I. (ed.), 1970: Radar Handbook. McGraw-Hill, New York.

[20] B. Isom, R. Palmer, R. Kelley, J. Meier, D. Bodine, M. Yeary, B. Cheong, Y. Zhang, T.-Y. Yu, M. Biggerstaff (2015): The atmospheric imaging radar: simultaneous volumetric observations using a phased array weather radar. Journal of Atmospheric & Oceanic Technology 30(4), pp. 655-675

[21] N. Anraku, F. Mizutani, M. Wada, H. Handa, T. Ushio, S. Satoh (2013): Development of Phased-Array Weather Radar System for 3D Observation of Cumulonimbus Clouds. 36th Conference on Radar Meteorology, American Meteorological Society

[22] M. Wada, H. Goto, F. Mizutani, T. Ushio, S. Satoh (2013): Development of Dual Polarization Phased Array Radar. 36th Conference on Radar Meteorology, American Meteorological Society

[23] M. Wada, H. Yonekubo, T. Ushio, S. Satoh, A. Adachi, S. Tsuchiya (2016): Development of Phased-Array Weather Radar: Field Trial, Dual-Pol, and How It Reduces Disaster. CIMO-TECO 2016, Keynote 2A

[24] D. Atlas, R.C. Srivastava, R.S. Sekhon (1973): Doppler Radar Characteristics of Precipitation at Vertical Incidendence. Reviews of Geophysics and Space Physics, 11, pp. 1-35

[25] K.S. Gage, C.R. Williams, P.E. Johnston, W.L. Ecklund, R. Cifelli, A. Tokay, D.A. Carter (2000): Doppler radar profilers as calibration tools for scanning radars, J. Appl. Meteor. 39, pp. 2209–2222

[26] Fujita, T.T., (1985): The Downburst, microburst and macroburst. SMRP Research Paper 210, 122 pp.

Draft for Members' Review

© World Meteorological Organization, 2018

World Meteorological Organization

COMMISSION FOR INSTRUMENTS AND METHODS OF OBSERVATION

Seventeenth Session
Amsterdam, The Netherlands, 12 to 16 October 2018

CIMO-17 / INF. 3.1
Submitted by:
Secretary-General
24.IX.2018

WMO STRATEGIC PLANNING

WMO Strategic Plan

The WMO Secretary-General or his representative will inform the session on the follow-up to Recommendation 20 (EC-70) – WMO Strategic Plan.

In particular, the WMO Secretary-General or his representative will illustrate the overall concept of the WMO Strategic Plan, which provides a high-level vision and overarching priorities of the future direction of WMO, articulated in long-term goals and strategic objectives with focused implementation areas for the financial period 2020–2023 and related monitoring indicators.

The text of above decision is available in the Abridged Final Report of the Seventieth Session of the Executive Council: https://library.wmo.int/doc_num.php?explnum_id=4981.

WMO constituent bodies reform

The WMO Secretary-General or his representative will also inform the session of the outcomes of the Seventieth Session of the Executive Council concerning the WMO constituent bodies reform, in particular Recommendation 25 (EC-70) – WMO technical commissions and other bodies.

The text of the above and other recommendations related to the reform are also available in the Abridged Final Report of the Seventieth Session of the Executive Council.

_____

World Meteorological Organization

COMMISSION FOR INSTRUMENTS AND METHODS OF OBSERVATION

Seventeenth Session
Amsterdam, The Netherlands, 12 to 16 October 2018

CIMO-17/INF. 3.2(3)
Submitted by:
Secretary-General
25.IX.2018

CIMO RELATIONSHIP WITH GFCS

Global Framework for Climate Services (GFCS)

1. Resolution 7 of the Intergovernmental Board on Climate Services (IBCS-1) – *Establishment of a stakeholder engagement mechanism and participation of GFCS stakeholders in the work of the Intergovernmental Board on Climate Services*- established the Partner Advisory Committee (PAC) of the Intergovernmental Board on Climate Services. The PAC is mandated to providing expert advice and recommendation of GFCS stakeholder issues to the IBCS. The current membership of the PAC can be found at: http://gfcs.wmo.int/pac_members.

2. The increasing socio-economic and environmental impacts from extreme weather and climate events manifested through floods, droughts, heatwaves, severe storms, etc., have led to the rise of climate on the international agenda and with it, the need and explosion of climate-related activities and financing that could be expected to rise in the following years. Due to the increase of climate financing, various actors have been implementing activities that promote the use of new technologies and innovative approaches such as the Global System for Mobile Communication (GSM) signal attenuation to determine rainfall, the use of lightning detection systems as proxy for weather radars, three dimension (3D) printers for producing instruments for observation, among others. Owing to the proliferation of these new and innovative approaches, PAC members are concerned about compliance with WMO standards for observations.

3. In view of the above, CIMO is invited to consider appropriate mechanisms for assessing these new and innovative emergent methodologies and techniques so they can be included in the WMO guidance materials for observations to assist partners and Members complying with WMO standards.

_____

World Meteorological Organization

COMMISSION FOR INSTRUMENTS AND METHODS OF OBSERVATION

Seventeenth Session
Amsterdam, the Netherlands, 12 to 16 October 2018

CIMO-17/INF. 3.2(5)
Submitted by:
Secretary-General
31.VII.2018

AERONAUTICAL METEOROLOGY

References

A. Outcomes of the 2016-2017 Global Survey on Aeronautical Meteorological Service Provision (AeM SERIES No. 1).

B. Proceedings of the 2017 WMO Aeronautical Meteorology Scientific Conference (AeM SERIES No. 2).

Outcomes of a 2016/2017 CAeM global survey on aeronautical meteorological service provision

In 2016/2017, the Commission for Aeronautical Meteorology (CAeM) conducted a global survey on aeronautical meteorological service provision. The primary objective of the survey was to establish a comprehensive, consolidated global view on the existing institutional arrangements for the provision of meteorological services to international air navigation, particularly at a national level, taking into account the supporting regulatory frameworks of WMO and the International Civil Aviation Organization (ICAO). The survey with WMO Members yielded a response rate of more than 90%.

The outcomes of the global survey were published by WMO in November 2017 as AeM SERIES No. 1 (English only).

In respect of the supply of aerodrome observations, the survey sought to determine whether these were produced manually, via automated systems, or via a combination of manual and automated production. In addition, the survey sought to establish national plans for migrating to fully automated observations where such practices do not already exist.

About 10% of Members produce aerodrome observations *without* the aid of automated weather observing equipment while less than 1% produce aerodrome observations through automated means *only* (i.e. with no manual intervention). For the balance, the large majority of cases, automated observations play some role in combinations of manual and automated production.

Members are divided roughly evenly on their plans to migrate to fully automated aerodrome observations or not. Reasons for not migrating to fully automated aerodrome observations vary significantly between Members and across regions, but generally include quality issues, lack of funding or negative business cases as well as Members that opt for a hybrid approach. Such hybrid approaches include fully automated observations only outside opening hours or non-operational hours of the aerodrome, semi-automated observations only with manual supervision over the system, and scenarios consisting of a mix of fully automated observations and manual observations, supported by automated weather observing equipment, for larger and/or congested airports.

Outcomes of a 2017 WMO Aeronautical Meteorology Scientific Conference

In November 2017, the CAeM with the assistance of the Commission for Atmospheric Sciences (CAS) and Commission for Basic Systems (CBS) conducted an Aeronautical Meteorology Scientific Conference (AeroMetSci-2017) in Toulouse, France.

The objective of the conference was to provide a forum for representatives of the scientific research community (including research institutes, universities and other academia), aeronautical meteorological service providers (public and private sector), aviation users and industry to discuss the need for and strategic direction of meteorological scientific and technological advancement in support of current and future air transport needs. The conference addressed the following lead topics: (1) Science underpinning meteorological observations, forecasts, advisories and warnings; (2) Integration, use cases, fitness for purpose and service delivery; and (3) Impacts of climate change and variability on aviation operations and associated science requirements.

At the conclusion of the conference a set of recommendations and a statement were formulated to better inform the planning of meteorological scientific research activities over the next 15 years consistent with aviation users' needs and expectations. The demand for improved access to data – especially aircraft-based observations – to support validation, verification and calibration as part of continuous improvement drive was one of a number of component parts of the recommendations. In addition, the conference stated, inter alia, that the role of meteorology as a key enabler to aviation's vision for a globally interoperable, harmonized air traffic management system of the future that is safer, more efficient and more environmentally responsible will only be realized through the accelerated transition of scientific research and technological advancement into operations based on aviation users' needs, new and improved community partnerships, trust, transparency and openness.

The proceedings of AeroMetSci-2017 that includes the complete set of recommendations, statement and presentation materials (technical papers and posters) was published by WMO in May 2018 as AeM SERIES No. 2 (English only).

CAeM-16 considerations of relevance to CIMO

The sixteenth session of the Commission for Aeronautical Meteorology (CAeM-16) was held from 24 to 27 July 2018 in Exeter, United Kingdom. The CAeM-16 session was preceded by a one-day Technical Conference (TECO) on 23 July 2018 with the theme "*The future is now: Meteorology enabling aviation decision support*". Materials related to the CAeM-16 session and TECO are available at URL: http://meetings.wmo.int/CAeM-16/.

During the course of its deliberations, the CAeM gave consideration to coordination with other constituent bodies, including technical commissions, and the activities being undertaken within other WMO programmes of relevance to the Commission in support of the Aeronautical Meteorology Programme (AeMP).

The CAeM-16 session was informed that the CAeM Management Group had acknowledged a need for improved coordination and collaboration between the CAeM and CIMO in the context of meteorological observations supporting international air navigation. For example, guidance on meteorological observations at aerodromes and (increasingly) in the terminal area could be improved or developed, including in the context of automated observing systems, and that there needs to be a way to direct periodic aviation-specific enquiries on instruments and methods of observation to persons with the necessary level of expertise to respond.

_____

World Meteorological Organization

COMMISSION FOR INSTRUMENTS AND METHODS OF OBSERVATION

Seventeenth Session
Amsterdam, the Netherlands, 12 to 16 October 2018

CIMO-17/INF. 3.2(6)
Submitted by:
Secretary-General
25.VII.2018

CIMO RELATIONSHIP WITH OTHER WMO ACTIVITIES

Potential CIMO benefits and contributions to the WMO Global Campus Initiative

CIMO members are requested to become acquainted with the activities of the WMO Global Campus initiative and to utilize and contribute to these to enhance capacity development of Members. The summary below constitutes a report on the status of the initiative, and opportunities for CIMO to benefit and contribute.

- **WMO Global Campus Roadmap**: The draft WMO Global Campus Roadmap v.3 provides details of the feasibility study and recommendations for future implementation. The Roadmap can be found on the WMOLearn portal (http://learn.wmo.int). CIMO members are encouraged to comment on the Roadmap.

- **Working Methods**: The WMO Global Campus Working Group is formed by members of the Executive Council Panel of Experts on Education and Training. The initiative is coordinated by the Education and Training Office, with the support of several task teams.

- **The WMOLearn portal**: WMOLearn was created on the WMO Public Website in early 2017 to host feasibility study outcomes, including the Roadmap, and to point to external tools and resources, where appropriate (http://learn.wmo.int).

- **Events Calendar**: In September 2017, the WMOLearn Events Calendar was made operational, and has been systematically updated and improved since. Software development and hosting is contributed by WMO RTC Barbados, CIMH, using a calendar system shared by EUMETSAT. The Events Calendar is a searchable database of announcements for courses and other related events (http://learningevents.wmo.int). The calendar is being promoted to encourage contributions by RTCs and other training providers and for use by all WMO Members. Promotional material has been disseminated by WMO to encourage use of the calendar by Members. In the future, additional hosting institutions for this synchronizable database and calendar API may be sought to ensure stability and shared effort. CIMO members should encourage training providers offering courses on instruments and observations to advertise their events through the Events Calendar.

- **WMOLearn Library established**: The WMOLearn Library of learning resources, which is an expansion to the current WMO E-Library, will provide links to useful learning resources both within the Secretariat and hosted by external providers. The WMOLearn Library was developed and is maintained in a collaboration between the ETR Office and the WMO Library, with additional input from Members. Marketing and population of the library to both providers and potential users continues throughout 2018. Copyright guidelines have been developed for contributors and users. CIMO should identify the most useful documents and other learning resources for Members to be submitted to the WMOLearn Library, and the publishers of these should be encouraged to make the submissions.

- **Regionalization of WMO Global Campus**: A “Regional Resources” section has been added to WMOLearn. This section highlights WMO RTCs, but also other regional institutions and collaboration efforts. Regional meetings, projects and collaborations are being promoted.

- **WMO Priority Areas and support for implementation of competency frameworks**: Training events and learning resources in all WMO priority areas are being sought for inclusion in the Events Calendar and Library, through consultation with the respective technical departments and commissions. Both the Library and Events Calendar allow searches by WMO competency framework. CIMO should consider how WMO Global Campus mechanisms can help with implementation of the CIMO competency frameworks.

- **Quality assurance**: Quality assurance processes have been developed to increase trust that shared materials are up-to-date, of high quality and come from trusted sources. Guiding principles for quality assurance of training are shared and must be reviewed and signed off on by all contributors.

- **Increased collaboration and sharing**: Collaborative Projects are highlighted on the WMOLearn website to encourage additional collaborations. Mechanisms for promoting collaboration and sharing best practices in education and training innovations are under investigation, including a potential peer-reviewed publication on innovative projects, guidance of developing MoUs and a database of experts willing to serve as trainers. CIMO members should consider how partnerships can facilitate meeting capacity development needs.

- **Standardized competency-based training certificates**: A small team has been investigating the use of Open Digital Badges as a standard method for designating completion of training that addresses WMO competencies. This would allow an individual to demonstrate developing knowledge and skill attained by different methods and through different institutions.

- **Training available in more languages**: The COMET Programme and Meteorological Service of Canada collaborated in developing the COMET Translations Resource Center. This site provides guidance on good practices in translations projects.

- **Promotion of new methods of training delivery**: WMO ETR Office has and is producing additional resources on distance learning delivery, which will be expanded to promote other effective and efficient training delivery methods. The Trainer Resources Portal collects resources on topics related to training competency. CIMO is encouraged to promote effective training methods and efficient training delivery platforms.

- Additional potential activities for upcoming work are outlined in the WMO Global Campus Roadmap.

_____

World Meteorological Organization

COMMISSION FOR INSTRUMENTS AND METHODS OF OBSERVATION

Seventeenth Session
Amsterdam, the Netherlands, 12 to 16 October 2018

CIMO-17/INF. 3.2(7)
Submitted by:
Secretary-General
27.VIII.2018

GLOBAL CRYOSPHERE WATCH PRIORITIES

During the seventeen financial period, GCW has made substantial progress in key areas, as defined in the Implementation Plan approved by Cg-17. EC-70 noted with satisfaction that GCW has been successful in engaging both, National Meteorological and Hydrological Services (NMHS) and non-NMHS organizations, academia, and independent research and operational organizations, on achieving the consistent *in-situ* observation of all components of the cryosphere (snow, glaciers, permafrost, sea ice, ice sheets, lake and river ice, icebergs).

During the preoperational phase, planned for the eighteen financial period, GCW will focus on the following objectives:

(a) Supporting Members in developing national cryosphere end-to-end monitoring and service partnership frameworks;

(b) Developing and publishing value added cryosphere products, relevant to water resource and ecosystems management;

(c) Improving the access to, and the management of quality of current and past cryosphere data and products;

(d) Developing and publishing GCW regulatory and guidance material, including for supporting capacity development.

As a result of the collaboration between CIMO and GCW, a new volume on the Measurement of Cryosphere Variables has been added to the *Guide to Meteorological Instruments and Methods of Observation* (WMO-No. 8), the 2018 edition. The new volume includes many of the recommendations made at the conclusion of the Solid Precipitation Intercomparison Experiment (SPICE), where CIMO and GCW collaborated, closely.

The collaboration between CIMO and GCW is critical to developing and disseminating guides and best practices for the measurement and observation of cryosphere variables, thus contributing to the management of quality of current and past cryosphere data and products, and to ensure the compliance to established practices, at national level, in particular in polar and mountain areas.

_____

World Meteorological Organization

COMMISSION FOR INSTRUMENTS AND METHODS OF OBSERVATION

Seventeenth Session
Amsterdam, The Netherlands, 12 to 16 October 2018

CIMO-17/INF. 3.2(8)
Submitted by:
Secretary-General
25.IX.2018

CIMO RELATIONSHIP WITH CAgM

Standards for Simple Farmer Rain Gauges

The National Meteorological Service of Mali developed the concept of roving seminars on weather and climate with farmers in West Africa 25 years ago to increase the interaction of the National Meteorological Service and farmers. One aspect of these Roving Seminars was to distribute simple farmer rain gauges to the rural community.

Based on experience in Mali, the METAGRI project was developed under the framework of the Western Africa Conference of Directors of National Meteorological and Hydro-meteorological Services (WADC). Funding for the project came from the State Agency for Meteorology in Spain (AEMET), the Norwegian Government and other donors. One of the aims of the METAGRI project was to increase the interaction between the NMHSs and rural farmers while at the same time providing assistance at the local level by distributing rain gauges among the farmers participating in the seminars. The project was developed with a view to empowering the farmers with agro-climate information to better manage meteorological and climate-related risks for sustainable agricultural production.

Over the four year period from 2008 to 2011, more than 7000 people participated in the seminars of which almost 80% were rural farmers and the rest were from meteorological services, agricultural extension agencies and other national technical institutions. Over 7100 simple plastic rain gauges have been distributed to rural farmers by NMHSs in the region since 2008. The project involved 17 countries in West Africa and it ended in 2015.

The sixteenth session of the Commission for Instruments and Methods of Observations (CIMO-16, 10 – 16 July 2014, St. Petersburg, Russian Federation) agreed to collaborate on the development of practices for use of simple rain gauges in national volunteer observation networks to support agro-meteorological applications (see para. 7.61). In October 2014, the President of CIMO agreed to facilitate the cooperation between the staff of the WMO Secretariat on Agrometeorology and the WMO/CIMO Lead Centre “B. Castelli” on Precipitation Intensity.

A meeting was held at Vigna di Valle, Italy in February 2015, between the CIMO Lead Centre and the WMO Agrometeorology staff to discuss the technical evaluation of the simple rain gauges in the laboratory and in the field.

The work performed at the Lead Centre consisted of a preliminary laboratory assessment of instrument accuracy, held in 2015 at the rain gauge laboratory of the University of Genoa, Italy, for a set of gauges provided by the METAGRI project. Following the laboratory tests, an inter-comparison campaign was held using the same gauges at the field test site of the Lead Centre in Vigna di Valle (Rome, Italy). The final report aims to describe the activities performed during the cooperation and to synthesise the results achieved. It also provides guidance material for improving the measurement accuracy and fostering standardization.

The report noted the importance of a standardized measurement procedure and dedicated training of the personnel who actually perform the measurement are highlighted as key factors to achieve accurate measurements. Two indications to foster more reliable rainfall measurements for agricultural purposes seem to have emerged: to improve the design of the gauge and continue with training and the dissemination of good practices in measurement procedures.

Standards for Soil Moisture Measurements

At the Sixteenth Session of the Commission for Agricultural Meteorology, a Task Team on Soil Moisture Measurements was established. The following is a summary of the final report of the Task team.

This Task Team has reviewed the international in-situ soil moisture standards and guidelines for global ground-truth soil moisture measurements. The top 5 cm was defined as standard surface level for surface soil moisture measurements. Cross-sensor calibration and validation of different soil probes have been performed. For demonstration purposes, the integrated soil moisture data combining remote sensing measurements and in-situ observations have been generated and are available. Downscaling of surface soil moisture retrieval by combining satellite and in situ measurements also has been developed.

Future work includes: (1) to review and provide the standards and guidelines for international soil moisture measurements; (2) to enhance soil moisture Cal/Val efforts; (3) to write proposals for further development and expanded national coverage of the WMO Soil Moisture Demonstration Project (SMDP); and, (4) to study soil moisture applications impacting agriculture, natural hazards and the Water-Energy-Food Nexus.

_____

World Meteorological Organization

COMMISSION FOR INSTRUMENTS AND METHODS OF OBSERVATION

Seventeenth Session
Amsterdam, The Netherlands, 12 to 16 October 2018

CIMO-17/INF. 3.2(9)
Submitted by:
Secretary-General
19.IX.2018

CIMO RELATIONSHIP WITH OTHER WMO ACTIVITIES

COLLABORATION BETWEEN CIMO AND CAS

"Low-cost sensors for the measurement of atmospheric composition: overview of topic and future applications" Executive Summary

Measurements of air pollution and greenhouse gases underpin a huge variety of applications that span from academic research through to regulatory functions and services for individuals, governments, and businesses. Whilst the vast majority of these observations continue to use established analytical reference methods, miniaturisation has led to a growth in the prominence of so-called low-cost instruments that are often described generically as "low-cost sensors" (LCS). Different technologies falling within this class are completely passive sensors that may have costs of only a few dollars, through to more complex microelectromechanical devices that use the same analytical principles as reference instruments, but in smaller footprint packages. Low-cost sensors cover a wide range of different devices that produce variable quality of measurements, and this should be taken into account when selecting LCS for specific studies.

The report considers specifically sensors that are designed for the measurements of atmospheric composition at ambient concentrations focusing on classical gaseous air pollutants (CO, NOx, O_3, SO_2), particulate matter and greenhouse gases CO_2 and CH_4 (available at www.wmo.int/gaw).

The report identifies some applications where new scientific and technical insight may potentially be gained from using a network of sensors when compared to sparsely located observations. Access to low-cost sensors offers exciting new atmospheric applications, may support new atmospheric services and potentially facilitates the inclusion of a new cohort of users. The report demonstrates, based on the scientific literature available at the moment, that there are some trade-offs that arise when low-cost sensors are used in place of existing reference methods. Smaller and/or cheaper devices tend to be less sensitive, less precise and less chemically-specific to the compound or variable of interest.

This report provides a view of the current state of the art in terms of accuracy, reliability and reproducibility of a range of different sensor approaches when compared to reference instruments. It highlights some of the key analytical principles and what has been learned so far about low-cost sensors from both laboratory studies and real-world tests. It also provides a summary of concepts on how sensors and reference instruments may be used together in a complementary way, to improve data quality and generate additional insight into pollution behaviour. The report also provides advice on key considerations when matching a project/study/application with an appropriate sensor monitoring strategy, and the wider application-specific requirements for calibration and data quality.

The report contains a number of suggestions on future requirements for low-cost sensors aimed at manufacturers and users of the low-cost sensors and for the broader atmospheric community.

This assessment was initiated by request of the WMO Commission for Atmospheric Sciences (CAS) and supported by broader stakeholder atmospheric community including the International Global Atmospheric Chemistry (IGAC) project, Task Force on Measurement and Modelling of LRTAP Convention, UN Environment, World Health Organization, Network of Air Quality Reference Laboratories of the European Environment Agency.

Future infrastructures

Computing technologies increasingly provide the capability to develop and run operationally high-resolution and complex ensemble based numerical weather, climate and environmental prediction systems. Achieving the vision of seamless prediction of the Earth system places additional demands on the observing system, such as obtaining very high resolution observations in near-real time, securing long-term records of essential climate variables and improving our ability to monitor greenhouse gas and aerosol concentrations. Data from non-conventional sources may play an increasingly important role in developing and providing services. The increasing amount of data, both from models and observations, poses a challenge for data storage and archiving, as well as for the prediction chain to make new and improved forecasts available and accessible to a wide range of users in a timely manner. In addition, the landscape of observation data generators and owners, model developers and forecast service providers, as well as of users of these data and information, has become complex, moving away from having the National Meteorological and Hydrological Services and research centres as the sole major players in the field.

Challenges in optimizing the observing system for a wide range of services including those based on seamless prediction also require extracting useful information from non-conventional observations; exploiting next generation ground-based and satellite remote sensing; availability of data on human impacts and responses; and the ongoing effort to assess the relative contributions of different observing system components. Quality assurance and quality control are an essential part of the development of new observation data sources.

A new culture in the use, in an effective way, of Earth system data, models and the analytical tools applied to these, needs to be cultivated. Ways and solutions have to be sought, for example, via public-private partnerships, data use policies and other means, on how to ensure that the development of such a culture is supported by and beneficial for all parties involved.

_____

World Meteorological Organization

COMMISSION FOR INSTRUMENTS AND METHODS OF OBSERVATION

Seventeenth Session
Amsterdam, the Netherlands, 12 to 16 October 2018

CIMO-17/INF. 3.2(10)
Submitted by:
Secretary-General
24.VIII.2018

CIMO RELATIONSHIP WITH OTHER WMO ACTIVITIES

Relationship with the Commission for Basic Systems (CBS)

Operational Weather Radars

Impact Studies related to Weather Radars

Executive Council adopted Decision 26 (EC-70) – Impact assessment for observing system design and evolution. The list of recommended Science questions requiring NWP impact assessments for observing system design and evolutions is provided in the Annex to this Decision, and particularly includes the following Weather Radar related questions, which Members are invited to address:

(a) S2 Radar: Radar observations - What are the impacts of current radar observations, particularly radar polarization, but also wind profiles, radial winds and reflectivity?

(b) S13 Data frequency/Timeliness - Assess the impact of increased frequency and/or timeliness/latency of observations? Consider the case of AMDAR, radiosonde, GEO satellites AMVs and ground-based remote sensing observations (such as Doppler radar, wind profiler, ground based GNSS receivers) for regional and global NWP.

Key EGOS-IP Actions related to Instruments and Methods of Observations for Members to implement

Executive Council adopted Recommendation 10 (EC-70) – Members' contribution to the actions specified in the Implementation Plan for the Evolution of Global Observing Systems, in the context of the future WMO Integrated Global Observing System Implementation Plan. It is expected that Congress in 2019 will adopt the Recommendation. Annex to the Recommendation includes Key Actions of the Implementation Plan for Global Observing Systems (EGOS-IP), which Members are requested to address as a matter of priority. The list includes the following actions of interest to CIMO:

(a) C7: *"Change management" procedures* – Ensure time continuity and overlap of key components of the observing system and their data records, in accordance with user requirements, through appropriate change-management procedures.

(b) G4: *WIGOS Standards* – Ensure exchange of observations from atmosphere, ocean, terrestrial observing system, according to the WIGOS standards. If needed, organize different levels of pre-processed observations in order to satisfy different user requirements.

(c) G14: *HR Radiosonde data* – Ensure a timely distribution of radiosonde measurements at high vertical resolution, together with position and time information for each datum, and other associated metadata.

(d) G18: *Processing & exchange of profiler data* – Ensure, as far as possible, the required processing and the exchange of profiler data for local, regional and global use. When profiler data can be produced more frequently than 1 hour, a dataset containing only hourly observations can be exchanged globally following the WIS principles.

(e) G40: *Metadata & representativeness of special stations* – Ensure, as far as possible in real time, exchange of observations, relevant metadata, including a measure of representativeness made by surface-based stations serving specific applications (road transport, aviation, agricultural meteorology, urban meteorology, etc.).

(f) G45: Dual polarization radars – Increase the deployment, calibration and use of dual polarization radars in those regions where it is beneficial.

(g) G47: Weather radars for developing countries & DRR – For areas in developing countries which are sensitive to storms and floods, a special effort has to be made to establish and maintain weather radar stations.

Protection of Radio Frequencies

Executive Council adopted Recommendation 12 (EC-70) – Radio frequencies for meteorological and related environmental activities. The draft Congress Resolution, expected to be adopted by Congress in 2019, considers the crucial importance of the allocation of suitable radio-frequency bands for the operation of surface-based meteorological observing systems, including in particular radiosondes, weather radars and wind profiler radars. It expresses its serious concern at the continuing threat to several radio-frequency bands allocated to the meteorological aids, meteorological-satellite, Earth exploration satellite and radiolocation (weather and wind profiler radars) services posed by the development of other radio communication services. Consequently, the draft Resolution Urges all Members to do their utmost to ensure the availability and protection of suitable radio-frequency bands required for meteorological and related environmental operations and research, and provides so guidelines in this regard (see Recommendation for details).

Competency Framework for Observing Programme and Network Planning

The “Competency Framework for Observing Programme and Network Planning” document is the result of work undertaken by the CIMO Task Team on Competencies to develop competencies for staff making meteorological measurements and observations, and performing maintenance and calibration of instruments for use as guidance by NMHSs and training institutes.

This work had resulted in the drafting of 4 competency frameworks for: Meteorological Observations, Instrumentation, Calibration and Observing Programme and Network Planning, which were provided to the ICT-IOS-9 session within Information document 10. These frameworks had been submitted to representatives of the Education and Training Programme, and Regional Training Centres for review, based on which the Task Team was developing the final set of competencies to be then submitted to CIMO MG for endorsement.

CBS reviewed the competency frameworks and confirmed that it supported the document to be finalized and published by CIMO. CBS agreed that the document should be “owned/managed” by CIMO, and invited CIMO President to take steps for its publication (together with the other 3 related competency sets) as appropriate.

Resolution 15 (EC-70) approved the proposed amendments to *Technical Regulations* (WMO-No. 49), Volume I – General Meteorological Standards and Recommended Practices, Part V, as contained in Annex 2 to this Resolution. In particular, this Annex 2 included section 1.8 on qualifications and competencies of personnel responsible for instruments, observations, and observing programmes and networks.

Aircraft-based Observations

Decision 37 (EC-70) – Inter-Programme Expert Team on Aircraft-Based Observing Systems (IPET-ABO)

The Executive Council has approved Decision 37 (EC-70) – Inter-Programme Expert Team on Aircraft-Based Observing Systems (IPET-ABO), which authorizes the president of the Commission for Basic Systems to establish, in consultation with the president of the Commission for Instruments and Methods of Observation, an Inter-Programme Expert Team on Aircraft-Based Observations and Systems, with the Terms of Reference given in the Annex to the Decision (see below).

This Decision also requests CBS to collaborate with CIMO in the selection of the chairperson and members of the Inter-Programme Expert Team and in the establishment of its work plan and calls on all technical commissions to ensure that the Inter-Programme Expert Team is aware of their priorities concerning aircraft based observing systems requirements, as appropriate.

Terms of Reference of the Inter-Programme Expert Team on Aircraft-Based Observations and Systems

Within the WIGOS framework and the auspices of the WMO Aircraft-Based Observing System Programme (ABO), under the governance of CBS and the joint guidance of CBS and CIMO, act as the WMO primary working group on aircraft-based systems and observations with responsibility to:

1. Oversee and coordinate the programmatic, scientific, and technical development and operation of aircraft-based observing systems (including AMDAR, Mode-S, ADS and other commercial systems), and of aircraft-based instruments and methods of observations;

2. Develop and manage the work plan and associated activities of the expert team, including the budget for associated expenditure of the AMDAR Trust Fund in line with its Terms of Reference;

3. Coordinate the development, scientific testing, validation and inter-comparison of existing and new methods of observation (including humidity, turbulence and inflight icing) for aircraft-based observing systems, as well as for Unmanned Aerial Vehicles (UAVs);

4. Organize and conduct the development, maintenance and provision of technical standards and specifications associated with aircraft-based observations according to user requirements;

5. Collaborate with the aviation industry (e.g. the airlines and IATA), relevant international and regional organizations (e.g. ICAO), on relevant matters, and oversee the international and regional aspects of management of aircraft-based observational data;

6. Promote development and maintenance of the aircraft-based observations component of the WIGOS Data Quality Monitoring System;

7. Review outcomes of relevant CIMO Testbed(s) and/or Lead Centre(s), and coordinate inclusion of guidance material in IOM reports and WMO-No. 8, *Guide to Meteorological Instruments and Methods of Observations*;

8. Compile and review updates and new material on aircraft-based observations and observing systems, including in particular maintenance of relevant Regulatory and Guidance Material, in WMO-No. 8, WMO-No. 1160, WMO-No. 1165 and WMO-No. 1200;

9. Conduct and provide support for training and outreach activities of WMO, to support the development of aircraft-based observing systems and the use of aircraft-based observations;

10. Work in collaboration and cooperation with other teams and WMO on the above activities as appropriate and as necessary;

11. Report on issues, activities and progress to CBS and CIMO, as well as to CAeM if required.

_____

World Meteorological Organization

COMMISSION FOR INSTRUMENTS AND METHODS OF OBSERVATION

Seventeenth Session
Amsterdam, The Netherlands, 12 to 16 October 2018

CIMO-17/INF. 3.2(12)
Submitted by:
Secretary-General
25.IX.2018

COLLABORATION ON CIMO-RELATED ASPECTS RELEVANT TO WORLD CLIMATE SERVICES PROGRAMME (WCSP) A SUB-PROGRAMME OF THE WORLD CLIMATE PROGRAMME

A description of the WCSP is available at: http://www.wmo.int/pages/prog/wcp/wcsp.html.

Ongoing collaboration topics to be continued and/or enhanced

(a) Recognition of centennial observing stations: CIMO is represented on the advisory board for the recognition of long-term observing stations and recognition criteria refer to CIMO-relevant aspects such as siting classification etc.

(b) Use of Automatic Weather Stations (AWS) observations for climate applications: WMO recently issued *Challenges in the transition from conventional to automatic meteorological observing networks for long—term climate records* (WMO-No. 1202). Another planned publication will provide guidelines on surface station data quality assurance for climate applications with explicit reference to AWS data.

(c) The *Guide to climatological practices* (WMO-No. 100) has various linkages to the *Guide to Meteorological Instruments and Methods of Observation* (WMO-No. 8, CIMO Guide).

Collaboration on emerging high priority issues for climate monitoring, including

(a) Involvement of CIMO experts on an ad hoc basis in the WMO/CCl evaluation committees of world weather and climate extremes archives https://wmo.asu.edu/.

(b) Identification of requirements for the use of remote sensing data for climate applications: These include requirements for observing practices and data management of remote sensing data derived from inter-alia, satellites, weather radars, and lightning detection systems.

(c) Definition of reference stations in collaboration with GCOS as part of the WIGOS tiered network approach, with further development of requirements for climate applications.

_____

World Meteorological Organization

COMMISSION FOR INSTRUMENTS AND METHODS OF OBSERVATION

Seventeenth Session
Amsterdam, the Netherlands, 12 to 16 October 2018

CIMO-17/INF. 3.2(14)
Submitted by:
Secretary-General
25.VII.2018

CIMO RELATIONSHIP WITH OTHER WMO ACTIVITIES

GCOS UPDATE

GCOS Implementation Plan

In 2015 GCOS produced the Status of the Global Observing System for Climate (GCOS-195) which presented an extensive account of how well climate is currently being observed, where progress had been made, and where progress was lacking or deterioration had occurred. While the current observing system has enabled great advances in understanding of the climate system and in the unequivocal identification of change and its human causes, more is still needed, especially at regional scales. With the increasing importance of climate mitigation and adaptation new demands are being made on climate observations. Both mitigation and adaptation are locally based and improved monitoring and prediction, on local as well as global scales are needed.

Building on the Status of the Global Observing System for Climate report, GCOS has produced The Global System for Climate: Implementation Needs (GCOS-200). This new Implementation Plan (IP) assures the availability and the continuity of systematic climate observations underlying the needs of the Parties to the UNFCCC and the IPCC, and builds on past achievements to ensure the system evolves as long-standing users' needs change and new users are established. The GCOS IP provides observational requirements for Essential Climate Variables (ECVs). It lists actions to maintain and improve observing networks and systems as well as actions that will lead to future improvements in observations, techniques and networks. It provides guidance to ensure open data access and indefinite data storage, delivery of operational products and production of products specifically to support climate services. It also plans the development of an agreed list of climate indicators. For the first time, the GCOS IP defines overall targets for the monitoring of the three global cycles, water, carbon and energy and for monitoring of the biosphere and reviews the climate observations needed for adaptation and mitigation. The Plan also identifies new ECVs and highlights the importance of the GCOS Cooperation Mechanism (GCM). The IP was published in October 2016 and many of the actions contained in it are of relevance to CIMO.

Following the publication of the GCOS IP, GCOS programme activities have been guided by the actions presented in the plan. As part of the general actions, a set of climate indicators has been identified that can be used to report on the general state of the climate to a broad audience.

GCOS Network Management

The GCOS Secretariat is reporting regularly on the GCOS Surface Network (GSN), the GCOS Upper-Air Network (GUAN) and the GCM, including the station list update, monitoring statistics for past and current years and current and recent observations projects undertaken by the GCOS network management.

A key component to report, update and encourage the work and responsibilities of the Lead Centres is the biannual meeting between the Lead Centre Representatives, WMO and GCOS. The last meeting was held in Cambridge, UK in September 2016 and tentatively the next meeting is to take place in Asheville, USA (September 2018).

Since January 2016 additional monitoring of the GSN stations has been provided through the EUMETNET Quality Monitoring Portal (QMP) (https://eucos.dwd.de/ravi/). This enhanced QMP not only provides real-time availability and timeliness statistics for surface and upper-air messages received at DWD (Offenbach, Germany) but also measurement quality as compared with NWP background fields (ECMWF). Members are encouraged to monitor the performance of their GSN stations through this portal, and report any issues with the appropriate WMO/GCOS Secretariat.

The GCOS climate monitoring principles require a high level of change management, in particular:

(a) The impact of new systems or changes to existing systems should be assessed prior to implementation;

(b) A suitable period of overlap for new and old observing systems is required;

(c) The details and history of local conditions, instruments, operating procedures, data processing algorithms and other factors pertinent to interpreting data (i.e., metadata) should be documented and treated with the same care as the data themselves.

Significant changes are being undertaken at many of the GSN and GUAN stations for instrumentation and methods of observations, but WMO/GCOS are receiving little evidence of the change management documentation or even notification that the change has taken place. Members are encouraged to follow the requirements of the GSN and GUAN and as far as possible inform the GCOS Secretariat of the change.

Performance Report of the GSN

The following statistics are an annual summary of the monthly CLIMAT messages in the GCOS Climate Archive (National Climate Environmental Information, NCEI, US). According to the GCOS requirements, a fully compliant GSN/RBCN shall have 12 CLIMAT reports. The values represent the 2017 percentage of stations that are compliant and those that are partially or non-compliant. In brackets are the statistics for 2016, 2015, 2014, 2013, 2012 and 2011 respectively.

Region	**No.**	**12 Monthly CLIMAT**	**6–11 Monthly CLIMAT**	**1–5 Monthly CLIMAT**	**0 Monthly CLIMAT**
RA I	155	**31 %** (40, 29, 29, 32, 28, 23)	**34 %** (25, 31, 33, 33, 36, 39)	**3 %** (9, 15, 10, 10, 11, 14)	**32 %** (26, 25, 28, 25, 25, 24)
RA II	258	**79 %** (83, 78, 71, 73, 73, 75)	**15 %** (10, 14, 21, 19, 19, 19)	**0 %** (2, 2, 3, 2, 2, 1)	**6 %** (5, 6, 5, 6, 6, 5)
RA III	101	**63 %** (65, 61, 76, 89, 84, 69)	**15 %** (29, 35, 20, 6, 13, 28)	**6 %** (0, 0, 1, 0, 0, 0)	**16 %** (6, 4, 3, 5, 3, 3)
RA IV	178	**86 %** (90, 88, 88, 88, 81, 80)	**12 %** (7, 9, 10, 11, 17, 18)	**1 %** (2, 2, 1, 1, 1, 1)	**1 %** (1, 1, 1, 0, 1, 1)
RA V	151	**61 %** (67, 66, 70, 63, 58, 52)	**21 %** (15, 16, 17, 16, 23, 34)	**3 %** (3, 4, 1, 7, 7, 1)	**15 %** (15, 14, 13, 14, 12, 11)
RA VI	138	**82 %** (84, 77, 80, 82, 78, 81)	**8 %** (7, 14, 9, 12, 17, 15)	**2 %** (2, 3, 5, 2, 1, 0)	**8 %** (7, 6, 6, 4, 4, 4)
ANTON	42	**83 %** (81, 77, 79, 60, 45, 50)	**12 %** (17, 19, 19, 36, 43, 33)	**5 %** (2, 2, 2, 2, 5, 12)	**0 %** (0, 2, 0, 2, 7, 5)

Regional Basic Climatological Network (RBCN, includes the GSN above)

Region	No.	12 Monthly CLIMAT	6–11 Monthly CLIMAT	1–5 Monthly CLIMAT	0 Monthly CLIMAT
RA I	723	**18%** (23, 16, 17, 19, 13, 12)	**22%** (17, 22, 20, 20, 23, 22)	**5%** (8,11,8,7,12,13)	**55%** (52, 51, 55, 54, 52, 53)
RA II	664	**77%** (80, 73, 71, 73, 67, 57)	**14%** (12, 17, 18, 15, 22, 30)	**1%** (1, 2, 4, 4, 1, 2)	**8%** (8, 8, 7, 8, 10, 11)
RA III	298	**60%** (64, 63, 73, 81, 73, 65)	**13%** (22, 25, 14, 6, 15, 23)	**8%** (1, 0, 1, 1, 1, 0)	**19%** (13, 12, 12, 12, 11, 12)
RA IV	337	**77%** (80, 78, 78, 72, 67, 66)	**10%** (8, 10, 11, 18, 18, 18)	**2%** (2, 3, 3, 2, 2, 3)	**11%** (10, 9, 8, 8, 13, 13)
RA V	247	**60%** (64, 63, 64, 59, 56, 50)	**19%** (16, 18, 21, 17, 24, 34)	**4%** (4, 4, 1, 9, 6, 3)	**17%** (16, 15, 14, 15, 14, 13)
RA VI	594	**85%** (85, 79, 81, 77, 77, 74)	**5%** (5, 12, 8, 13, 15, 18)	**1%** (1, 1, 3, 3, 1, 1)	**9%** (9, 7, 7, 7, 7, 7)

RA I is the poorest performing region, with only 31% of stations meeting the minimum requirement, and 32% not providing any CLIMAT messages. This has not significantly changed over the last 7 years. Thus whilst this continues to reinforce the need for GCOS to focus its support in this region, it also highlights that recent efforts to improve these statistics have had little impact. The drop in RA III statistics of fully compliant stations was due to CLIMAT messages from Peru not being received at NCEI. For the RBCN network, which includes the GSN, the situation is even worse in RA I with only 18% of stations meeting the minimum requirement. Regions I and IV show a significant increase in the percentage of stations with zero reports (RBCN versus GSN), suggesting that not all countries are sending CLIMAT messages for their RBCN stations, in addition to the GSN stations.

Performance Report of the GUAN

The following table is the 2017 summary for the GCOS Upper-Air Network (GUAN) monitoring against the GCOS minimum requirements (25 daily soundings to 30 hPa per month) for each region, according to the monthly statistics provided by NCEP. In brackets are the same statistics for 2016, 2015, 2014, 2013, 2012 and 2011. For 2012 and 2011 these are based on availability according to NCEI.

Region	Number of GUAN stations	% meeting minimum GCOS requirements in 2017 (% for 2016, 2015, 2014, 2013, 2012 and 2011)
RA-I	23	30% (39%, 35%, 39%, 46%, 48%, 57%)
RA-II	38	89% (87%, 87%, 87%, 87%, 87%, 87%)
RA-III	18	61% (61%, 67%, 72%, 67%, 89%, 78%)
RA-IV	24	92% (87%, 79%, 83%, 75%, 83%, 87%)
RA-V	38	79% (84%, 79%, 76%, 74%, 84%, 87%)
RA-VI	24	87% (87%, 87%, 87%, 83%, 92%, 87%)
ANTON	12	67% (58%, 67%, 58%, 58%, 83%, 83%)

Eleven (11) of the GUAN stations (6%) were 'silent' (zero reported TEMP observations) during 2017, which is the highest since this monitoring was started in 2011. In 2016 and 2015 it was seven (7), 2014 and 2013 it was three (3), four (4) in 2012 and five (5) in 2011.

The key points for each region are as follows:

In Region I, only 30% of the GUAN stations have met the minimum requirement for 2017, compared with 39% for 2016, which continues, by some margin, to be the worst performing region. This poor, and worsening, performance is mainly associated with the necessary funding required to operate and maintain an upper-air station. Communication with the station at a technical level to establish the cause of the poor performance continues to be a challenge and often means that relatively simple issues can go unaddressed for long periods of time. In addition there are an increasing number of stations that have problems and failures with their hydrogen generator systems which has resulted in a period of long-term inactivity. Three (3) stations were in-active during the period; Vacoas, Mauritius (Radiosonde consumables); Khartoum, Sudan (Hydrogen system); and Dar es Salaam, Tanzania (Hydrogen system). Eight (8) stations had at least 1 month with zero reported TEMP observations; 61641; 62414; 63985; 64910; 67774; 68110; 68592 and 68816.

The performance in Region II in 2017 was similar to that for the previous years, with 4 stations not meeting the minimum requirement. No stations were completely in-active during the period, although the station in Pakistan (41780) is only launching PILOT balloons and with no TEMP soundings for 7 years, it is not meeting the GUAN requirements. The two stations in Thailand (48327 Chiang Mai and 48453 Bangna) both had lengthy periods of inactivity owing to radiosonde supply issues, similar to 2016.

The performance in Region III in 2017 was the same as 2016 but slightly worse than for the period 2013–2015, and a marked decrease from 2011–2012, with 7 stations not meeting the minimum requirement. Three (3) stations were completely inactive, Manus 82332 and Fortaleza 82397, Brazil (Equipment and Hydrogen system) and San Cristobal 84008, Ecuador (Equipment and staffing issues).

The performance in Region IV in 2017 was again an improvement on the previous year, with 2 stations not meeting the minimum requirement. No stations were completely inactive during the period but two (2) stations, 76654 and 78762, had at least 1 month with zero reported TEMP observations.

Region V was slightly worse in 2017 compared to 2016, with 8 stations not meeting the minimum requirement. Four (4) stations were completely in-active during the period, Honiara, Solomon Islands; Vanuatu, Bauerfield; Rarotonga, Cook Islands and Port Moresby, PNG, all due to having no radiosonde consumables. Three (3) stations, 91610, 94302 and 96315, had at least 1 month with zero reported TEMP observations.

The performance in Region VI in 2017 was the same as for the previous 3 years, with 3 stations not meeting the minimum requirement. Only Yerevan, Armenia, had a period of inactivity owing to a fault with the hydrogen system, which was resolved at the end of March 2017.

The performance in the Antarctica region in 2017 was a small improvement than for 2016, with 4 stations not meeting the minimum requirement. No stations were completely inactive during the period. Halley Bay (89022) had an extensive period of inactivity owing to the station needing to be relocated for safety reasons

GCOS Cooperation Mechanism (GCM)

The GCM is the system improvement and resource mobilization activity of the GCOS programme. It has been established following a decision by the United Nations Framework Convention on Climate Change and its Subsidiary Body for Scientific and Technological Advice

(UNFCCC SBSTA) in 2004 (UNFCCC Decision 5/CP.5) in order “to enable developing countries to collect, exchange, and utilize data on a continuing basis in pursuance of the UNFCCC”. Since then, more than 3 million USD have been raised over the years to accomplish projects dedicated to improve climate observation systems. The following projects have been completed in 2016/17, or are still ongoing:

(a) Engagement of a consultant based in Harare, Zimbabwe, to work part-time (50%) in the support of GCOS projects in RA I. The focus of the work is to re-establish surface climate stations in Chad and Mali using funds kindly provided by Greece. New instrumentation, incorporating a non-mercury temperature solution, has been delivered and implemented in Chad;

(b) Support for the operations of the GUAN station at Yerevan, Armenia, was sponsored by Japan in 2016, with a new competitive tender for 400 units each of radiosondes and balloons, managed by GCOS. Unfortunately, the installed Hydrogen Generator became unserviceable in 2016 and further funds from Japan was necessary for the repair, service and local staff training, which was completed in April 2017;

(c) Support for the operations of the GUAN station at Nairobi, Kenya was sponsored by Switzerland in 2016, with a new competitive tender for 800 units of radiosondes (including a new supplier, ground-system and local staff training) and 400 balloons, managed by GCOS;

(d) GCOS provided financial support to Colorado State University, in support of the expansion of the CoCoRahs network in the Bahamas (Volunteer Rain Gauge Network). Work is ongoing to monitor the new network and analyse the data in comparison to existing climate stations;

(e) New instrumentation has been provide to a candidate BSRN observatory in Peru, using a new specification developed with CIMO and the BSRN community, and through a WMO competitive tender, managed by GCOS. Plans are being developed for the installation and initial testing of the new equipment so that the station can start the accreditation process for BSRN;

(f) Support for the operations of the GUAN station at Gan, Maldives was sponsored by Japan in 2016, with a new competitive tender for 400 units each of radiosondes and balloons, managed by GCOS;

(g) Equipment (cameras, copiers and shelving) for a data rescue project in Botswana was managed by GCOS and WMO, using funds kindly provided by Germany.

GCOS activities of relevance to CIMO

Instigated in 2016 by the Atmospheric Observations Panel for Climate (AOPC) are four task teams to address a set of actions of the Implementation Plan.

(a) The GCOS-Radar Task Team (TT-GRAD) is responsible for identifying requirements for the use of radar data for climate studies, including specifying adequate metadata and guidance on how to facilitate user access and preservation of data and to handle historical data. The 1st meeting was held at the Finnish Meteorological Institute in Helsinki in August 2017. A document including the above topics is in preparation;

(b) Lightning is a new ECV in the atmospheric domain, and an assigned task team, the GCOS/CCl Task Team on Lightning Observations for Climate Applications (TT-LOCA), is working on developing requirements and guidelines on the use of lightning data for climate, including the review and update of current lightning ECV requirements and the definition of standards and requirements for data management and data exchange of

lightning monitoring for climate applications. The 1st meeting was held at the NOAA in Greenbelt, USA, in February 2018. A document including the above topics is in preparation;

(c) Many actions in the Implementation Plan are related to the operation and monitoring of the GCOS Upper-Air Network (GUAN). A Task Team was created to review the network requirements, assess and document the benefits of meeting stated requirements and to review how it contributes as a baseline network in the tiered network framework with GRUAN and the comprehensive network. A 1st meeting of the Task Team took place at Lindenberg, Germany from 5 to 6 December 2017. The key message from this meeting was a need to refocus the requirements of the GUAN in provided 'guaranteed' high-quality observations and the benefits of its designation as a baseline network. It was also decided that the original data should be retained and archived, and a common format for the raw data should be defined. This Task Team will work with the relevant CBS and CIMO expert teams, and the management groups, to discuss and implement any proposed changes to the GUAN requirements;

(d) GCOS has established a task team to work on the development of a GCOS Surface Reference Network (TT-GSRN). A position paper, developed by members of the community "Towards a global land surface climate fiducial reference measurements network" and published in the International Journal of Climatology in 2018 (DOI: 10.1002/joc.5458), includes the rationale for the establishment of a surface reference network. The GSRN sites will measure several surface-based Essential Climate Variables simultaneously. The GSRN will provide metrological quality measurements with documented traceability and evaluation of measurement uncertainty. An important requirement for the GSRN will be compliance with standards of observing practice, including calibration, siting, instrumentation and quality control. The guide for the GSRN will include references to the CIMO guide and to the Guide to the Expression of Uncertainty in Measurement (GUM). Basing their work on this paper, the GSRN Task Team is asked to move forward the concept of a global surface reference network towards the practical implementation of such a network and to provide a concrete roadmap for consideration of the key stakeholders. During the first meeting, held at Maynooth University in Ireland, from 1 to 3 November 2017, it was decided to produce a document that will include benefits, requirements, network design, governance and management proposals. This document will be part of the material used to assess the interest in the GSRN from stakeholders and to investigate about possible resources;

Several actions in the Implementation Plan are related to the operation of the GCOS Reference Upper-Air Network (GRUAN). GRUAN is an international reference observing network of sites measuring ECVs above the Earth surface. It is the response to the need of WMO and GCOS for the highest accuracy data possible and is also part of WIGOS. GRUAN measurements provide long-term, high-quality climate data records from the surface, through the troposphere, and into the stratosphere that are being used to determine trends, constrain and calibrate data from more spatially-comprehensive observing systems (including satellites and current radiosonde networks), as well as providing appropriate data for studying atmospheric processes. GRUAN has currently 26 sites, with the aim to expand to 30 to 40 sites.

The Implementation Plan called for regional workshops looking at solving regional observing needs. In 2016, the UNFCCC also requested that these regional workshops were held. In October 2017, the first regional workshop was held in Fiji in conjunction with WIGOS. This meeting looked at upper air and precipitation observations in the Pacific Island states. It noted that, in this region, upper air observations provided the large global improvements in numerical weather prediction and climate models. The meeting also identified that it is not reasonable for these small countries with small populations, limited resources and vast areas to support the observation that provide global benefits. Currently the only regional observations are supported by countries outside the region: this support is declining. Problems were also identified with precipitation where the existing observations were not representative and some islands where drought is an issue had no observations at all. A plan is being developed to address these needs.

An ECV inventory has been developed by the Joint CEOS-CGMS Working Group on Climate (WGClimate) which provided details, including access information, to all the ECV satellite based records.

Support for some of the networks remains uncertain. The future of the International Soil Moisture Network (ISMN) is still unclear but funding is now secured for GOFC-GOLD which supports forest and wildfire observations. The Terrestrial Observation Panel for Climate (TOPC) is continuing to review the status of all the terrestrial ECV observations.

The GCOS-GOOS-WCRP Ocean Observations Panel for Climate is responsible for setting requirements for physical Essential Ocean Variables (EOVs) for GOOS (climate, real-time services, and ocean health). For Climate applications, OOPC works with GOOS biogeochemistry and biology panels to deliver requirements for Ocean ECVs into GCOS. For real-time services, OOPC works with the JCOMM Services programme area. The panel runs observing system evaluations to ensure the observing system is designed to meet requirements. OOPC then works with the JCOMM Observations Programme Area on Observing System (JCOMMOPS) targets, implementation and performance.

In order to meet consultation and reporting needs with GCOS, GOOS, WCRP and JCOMM, OOPC has developed a set of EOV Specification sheets in order to ensure the requirements are developed reviewed and reported consistently (http://www.goosocean.org/eov). These EOV specifications were the basis of the ECV based actions in the GCOS IP. In addition, network specifications have been developed with the JCOMM Observations Programme Area to improve the articulation of missions, targets, and key performance indicators for the observing system, to be tracked by JCOMMOPs (from deployment through to data delivery). These network specifications were drawn on for the observing networks section of the GCOS IP ocean chapter, and the progress against GCOS actions are therefore automatically monitored by JCOMMOPS.

The requirements developed through the EOV Specification process will feed into the Rolling Review of Requirements (RRR), ensuring consistency in how OOPC develops, reviews and communicates requirements.

Noting that we are seeing significant developments both in forecasting systems and in the observing system, the OOPC agreed to review the Statements of Guidance from the ocean observations perspective, and are providing feedback to the nominated representatives.

The Tropical Pacific Observing System, TPOS 2020 Project was formed to redesign and re-energise TPOS following an OOPC-supported international review workshop in 2014. The first report from TPOS 2020 was published in 2016, and the project is working towards the second report to be published in 2018. TPOS 2020 was identified as a WIGOS Pre-operational Regional Pilot by EC-69. The project noted in particular the need for further work on refining requirements, observing system design for ocean surface stress and air sea fluxes. As these issues are broader than the Tropical Pacific, TPOS 2020 will collaborate closely with OOPC.

OOPC is currently establishing observing system evaluations for:

(a) Tracking Ocean Heat and Freshwater Content;

(b) Air Sea Fluxes and Ocean Surface Stress;

(c) Boundary Currents and their interaction with the shelf;

(d) OOPC is also taking a strong role in organizing the next decadal ocean observing conference, OceanObs'19, www.oceanobs19.net.

_____

World Meteorological Organization

COMMISSION FOR INSTRUMENTS AND METHODS OF OBSERVATION

Seventeenth Session
Amsterdam, the Netherlands, 12 to 16 October 2018

CIMO-17/INF. 3.2(15)
Submitted by:
Secretary-General
31.VII.2018

QUALITY MANAGEMENT FRAMEWORK

References

A. Abridged final report with resolutions of the fourteenth World Meteorological Congress (Cg-XIV), 5 to 24 May 2003, Geneva, Switzerland (WMO-No. 960).

B. Abridged final report with resolutions of the fifteenth World Meteorological Congress (Cg-XV), 7 to 25 May 2007, Geneva, Switzerland (WMO-No. 1026).

C. Abridged final report with resolutions of the sixteenth World Meteorological Congress (Cg-XVI), 16 May to 3 June 2011, Geneva, Switzerland (WMO-No. 1077).

D. Abridged final report with resolutions of the seventeenth World Meteorological Congress (Cg-17), 25 May to 12 June 2015, Geneva, Switzerland (WMO-No. 1157).

E. Abridged final report with resolutions and decisions of the sixty-ninth session of the Executive Council (EC-69), 10 to 17 May 2017, Geneva, Switzerland (WMO-No. 1196).

F. WMO Technical Regulations (WMO-No. 49), Volume I – General Meteorological Standards and Recommended Practices (available here).

G. Guide to the Implementation of Quality Management Systems for National Meteorological and Hydrological Services and other Relevant Service Providers (WMO-No. 1100).

WMO Quality Management Framework and WMO Quality Policy

Quality management was first addressed by WMO in 2003 at the fourteenth World Meteorological Congress (Cg-XIV). The Congress adopted Resolution 27 (Cg-XIV) – Quality Management, and decided that WMO should work towards a WMO Quality Management Framework (QMF) for national meteorological and hydrological services (NMHSs) that would include the following elements to be dealt with on a phased basis:

(1) WMO technical regulations;

(2) Quality management systems (QMS), including quality control; and

(3) Certification procedures.

Since 2003, through Resolution 32 (Cg-XV), Resolution 26 (Cg-XVI) and Resolution 7 (Cg-17), the Organization, its Members and constituent bodies have reaffirmed a long-term commitment to the provision of high-quality information, products and services to society.

In support of the WMO QMF, in 2007 Congress approved a WMO Quality Policy through Resolution 32 (Cg-XV). The Annex to Resolution 32 (Cg-XV) specifically contained the WMO Quality Policy in the form of a policy statement and a strategy aimed at ensuring a process of continuous improvement, efficient management and good governance. In 2015, Congress decided through Resolution 7 (Cg-17) to further the development of the WMO QMF with a focus, inter alia, on a review and actualization of the WMO Quality Policy as an organization-wide policy complementing the WMO Strategic and Operating Plans.

Amendment to WMO Technical Regulations

The aforementioned Congress resolutions have been supplemented during intersessional periods by resolutions or decisions of the Executive Council. For example, in 2017, Resolution 20 (EC-69) – Amendment to *Technical Regulations* (WMO-No. 49), Volume I – General Meteorological Standards and Recommended Practices (quality management provisions) resulted in a 2017 update to the 2015 edition of WMO-No. 49, Volume I, such that a new Part VII – Quality Management was introduced.

Resolution 20 (EC-69) also invited the presidents of technical commissions to align relevant provisions of the Technical Regulations and related guidance material within their respective areas of responsibility and expeditiously prepare subsequent amendments as necessary. In addition, Resolution 20 (EC-69) urged Members to consider timely implementation of the new provisions aimed at enhancing the quality management practices and procedures, taking into consideration relevant national requirements and normative frameworks.

Update to supporting WMO guidance

In support of the amendment to WMO-No. 49, Volume I, referenced above, WMO published a 2017 edition of its quality management guidance material. Specifically, the *Guide to the Implementation of Quality Management Systems for National Meteorological and Hydrological Services and other Relevant Service Providers* (WMO-No. 1100) was published so as to provide guidance to Members on how to develop and implement a quality management system (QMS).

The Guide details the steps required to obtain certification of compliance with the ISO[1] standard ISO 9001:2015, Quality Management System – Requirements (ISO, 2015*c*). It also provides the steps for transition from ISO standard ISO 9001:2008 (ISO, 2008) to standard ISO 9001:2015 (ISO, 2015*c*).

The Guide is especially focused on WMO Member National Meteorological and Hydrological Services (NMHSs). However, it could be successfully utilized by other service providers, such as non-NMHS aeronautical meteorological service providers, to help them meet the ICAO Annex 3 quality assurance requirements. It is also applicable to the management of relevant WMO programmes by WMO constituent bodies.

The ISO 9001:2015 standard

The ISO 9000 series addresses quality management. The standards provide guidance and tools for organizations looking to ensure that their products and services consistently meet customer's requirements, and that quality is consistently improved. The ISO 9001:2015 standard establishes the criteria for a QMS.

In September 2015, ISO 9001:2015 replaced its predecessor standard (ISO 9001:2008). Organizations certified to ISO 9001:2008 were granted a three-year transition period after the revision to migrate their quality management system to the new edition of the standard. This means that any organization that has not transitioned to ISO 9001:2015 by September 2018 will have an invalid ISO certificate. More information available here.

_____

[1] International Organization for Standardization (ISO). Information available here: https://www.iso.org/.

World Meteorological Organization

COMMISSION FOR INSTRUMENTS AND METHODS OF OBSERVATION

Seventeenth Session
Amsterdam, The Netherlands, 12 to 16 October 2018

CIMO-17 / INF. 3.3
Submitted by:
Secretary-General
9.X.2018

COLLABORATION WITH RELEVANT INTERNATIONAL ORGANIZATIONS

International Organization for Standardization (ISO)

General matters

1. A note of caution: There is still confusion in the WMO community on the terminology used with respect to ISO standards because of the term "standard" that has a completely different meaning in the ISO and WMO communities:

(a) In the WMO terminology, "standard practices and procedures" are the practices and procedures that Members are required to follow or implement (shall).

(b) In the context of the Working Arrangements between WMO and ISO, the word "standard" is meant as defined by ISO/IEC Guide 2:2004. In this context, an ISO standard is a document describing a procedure to be followed, and does not have the meaning of a WMO standard practice that requires Members to implement it. ISO standards are voluntary, as long as they are not stated in regulatory documents, such as the WMO Technical Regulations and Manuals.

The approval process for common WMO-ISO standards

The Working Arrangements between WMO and ISO are not specific on how the internal approval process of the two organizations takes place. Following on the signature of the working arrangements with ISO, the WMO Executive Council, at its sixty-first session adopted Resolution 8 (EC-61, Resolution 8) that is provided in the Annex 1 to this document. This resolution addresses how to propose a current WMO standard or recommended practice to become a common WMO-ISO standard, but it does not specify the WMO-internal approval process. Furthermore, it does not formalize the way WMO will decide to work together with ISO on a new work item started within ISO.

In view of the experience made with the approval process of the first three common WMO-ISO standards, it is proposed that the approval process be formalized and aligned, as far as possible, with the ISO process (see Annex 2) to ensure all WMO Members have a chance to express their views and propose amendments on the draft standard prior to its publication, and to save time by making the process as efficient as possible.

Within ISO, ISO standards are approved by the ISO Technical Committee/Sub-Committee that developed the standard. It should be understood that the membership of the ISO sub-committee varies greatly depending on the topics. ISO technical committees of interest to the work of CIMO (TC 113/SC 5, TC146/SC5, TC 180/SC 1) have a membership of typically 15 countries.

Within WMO, the standards that have been approved as common WMO-ISO standards have been submitted for review to the whole WMO membership, and approved by CIMO.

Participation of WMO, and in particular CIMO, in the work of ISO working groups

The CIMO Management Group recognized that it was important for WMO to be involved in the development of standards relevant to its work to ensure that they meet WMO expectations. Being part of the relevant working groups and contributing to these developments is beneficial as it enables WMO to influence the content of the standards, ensuring that they only standardize areas that promote quality and that do not prevent future technological developments. It also enables to prevent possible conflicts between guidance promoted by ISO standards, and the WMO publications. Appropriate experts need to be identified to contribute to the development of individual common WMO-ISO standards.

The scope of ISO standards is defined at the very beginning of the ISO standard approval process and cannot be changed later on. Therefore, in case new work items are proposed within ISO, it is important for WMO to ascertain from the very beginning that WMO has no concern with the proposed scope of the standards. In case of concern, expressing them at the ISO "Proposal stage" and taking part in the first meetings of the relevant working group, at which time the scope could possibly still be amended is very important. In addition, WMO opinion, expressed at the "Proposal stage", may be seen and taken into account by others, when making/preparing their decisions.

The Management Group also recognized that a standard should be developed as a common WMO-ISO standard only if WMO is able to provide experts to actively contribute to this development, representing the overall interests of WMO.

ISO standards are developed (and approved) by ISO Technical Committee/Sub-Committees. It should be understood that the membership of the ISO sub-committee varies greatly depending on the topics. ISO technical committee of interest to the work of CIMO (TC 113/SC 5 , TC146/SC5, TC 180/SC 1) have a membership of typically 15 countries.

Representing WMO in the work of ISO Technical Committee/Sub-Committee enables Members that are not normally part of the Sub-Committees to also contribute to the development of common WMO-ISO standards.

Status of collaboration with ISO

Common WMO-ISO standards

CIMO actively collaborated with ISO on three common WMO-ISO standards. Two of them were approved and have been published by both organizations independently:

(a) The Siting classification for surface observing stations on land,

(b) Ground-based remote sensing of wind by heterodyne pulsed Doppler lidar,

The third standard is in the final approval stage both within WMO and within ISO (it is being proposed for approval at CIMO-17):

Weather Radar - Part 1: System performance and specification.

Future work of interest

ISO has recently proposed to work on a number of standards relevant to WMO activities.

CIMO has already expressed interest to collaborate with ISO on the development of the following standards as common WMO-ISO standards:

(a) ISO 23032: Meteorology -- Ground-based remote sensing of wind -- Radar wind profiler (TC145/SC5),

(b) ISO 28902-4: Particle backscatter lidar,

Other standards that could be worth being developed as common standards as well, the decision to do so remains to be taken, are:

(a) ISO 23435: Test methods for snow depth sensors (TC146/SC5);

(b) ISO 23436: Test methods for visibility sensors (TC145/SC5);

(c) ISO 19926-2: Weather radar – Part II (TC146/SC5);

(d) ISO 23350: Hydrometry -Precipitation measuring devices (TC113/SC5);

(e) ISO 23334: Density of precipitation stations (TC113/SC5);

(f) ISO 23410: Reference raingauge pit (TC113/SC5).

Other standards

CIMO has also collaborated on the review of the standard ISO 9060 standard “Solar energy -- Specification and classification of instruments for measuring hemispherical solar and direct solar radiation” . The standard is currently in its final approval stage within ISO. There are some concerns that the new version of the standard may conflict with the CIMO Guide.

Association of Hydro-Meteorological Equipment Industry (HMEI)

HMEI has been again well represented in CIMO Expert Teams (ETs) during this intersessional period. The contributions from the HMEI experts have been very much appreciated and have positively contributed to the work and outcomes of these ETs.

Generic AWS tender specifications

The work on the generic AWS tender specifications has made significant progress lately. As proposed to CIMO-16, HMEI has developed, in collaboration with the World Bank, altogether 22 documents providing guidance on procurement practices for Automatic Weather Stations. HMEI also initiated the development of a software tool which is expected to support the tendering process. The set of documents were submitted to CIMO for a review in April 2017.

CIMO reviewed the documentation and made several proposals to improve it. CIMO identified a seconded expert who worked intensively on the documentation, through close collaboration with the CIMO Management Group and with HMEI.

The result of this work is meant to support Members and other organizations in their tendering processes. The documentation is based on and in line with the WMO guidance material and is neutral with respect to manufacturers. The documentation was made available for testing by WMO Members, manufacturers and funding agencies on the WMO website in July 2018 to ensure that it meets Members’ expectations, and to identify possible ways of improving it.

It is expected that the documentation could be further developed and finalized through close collaboration between CIMO and HMEI representatives, also taking into account feedbacks from Members, as available. Should this approach meet Members’ expectations, it could be widened, by providing templates for specific applications of AWS (for example, agriculture and aviation), and/or a similar approach could be followed for other observing systems (such as for upper-air measurements) and a user-friendly interface could be developed. However, this is likely to require significant resources.

The maintenance of this documentation in the future will also have to be considered in the CIMO work programme.

International Committee for Weights and Measures (CIPM) and International Bureau of Weights and Measures (BIPM)

Collaboration between CIMO and the metrology community has been very fruitful during the intersessional period and took place at different levels. BIPM experts were involved in several CIMO Expert Teams and have very positively contributed to the work and outcomes of these ETs. Collaboration also took place at the level of the European Association of National Metrology Institutes (EURAMET). Bertrand Calpini represented CIMO in the EURAMET Research Council and in its Task Group Environment.

The reduced session of TT-RadRef was held at the National Physical Laboratory, in London (UK), with participation of BIPM representatives. This was a very fruitful meeting. Again, the participation of the metrology experts was important in identifying the way forward for radiation references, and in particular in view of a possible reference change.

The metrology community suggested that CIMO, and more generally WMO, provides a list of priority topics to the metrology community, for metrologists to refer to when developing research project proposals, such as in the context of European Metrology Programme for Innovation and Research (EMPIR).

Several activities were carried out in the context of the EURAMET METEOMET project, which resulted in metrology and meteorology experts working together. A Metrology for Meteorology Workshop was organized in parallel with TECO-2016. Many NMHSs, particularly in RA VI, now have much closer ties to their respective NMIs.

An interlaboratory comparison took place across Europe with participation from all RA-VI RICs and many more NMHSs calibration laboratories. The processes developed during that interlaboratory comparison are now being applied for another interlaboratory comparison in RA II and V.

The Management Group recommended that further close collaboration with EURAMET should be encouraged via EMPIR.

Representative of International Organizations in CIMO Expert Teams

In some teams, representatives of other international organizations have changed several times during the intersessional period. In order to ensure the continuity and fluidity in the work of the expert teams, representatives of international organizations should endeavour to remain committed to membership of an ET for the whole intersessional period, as it is the case for other members of the teams.

The Management Group agreed that international organizations should be requested to provide nominations for each team at the start of the intersessional period, and from all those nominations for each team, CIMO MG would usually choose up to three representatives from each other international organizations to serve on the team.

_____

ANNEX 1

Resolution 8 (EC-LXI)

PROCEDURES TO BE FOLLOWED IN PROPOSING COMMON WMO/ISO TECHNICAL STANDARDS

THE EXECUTIVE COUNCIL,

Noting:

(1) Article 26 of the WMO Convention,

(2) Resolution 6 (Cg-V) – Relations with the United Nations and other international Organizations,

(3) The working arrangements between the International Organization for Standardization (ISO) and WMO formally adopted on 16 September 2008,

Recognizing the wide ranging benefits to National Meteorological and Hydrological Services and user communities resulting from the implementation of common Standards for meteorological, climatological, hydrological, marine and related environmental data, products and services,

Considering:

(1) The importance of following up on the working arrangements between the International Organization for Standardization and the World Meteorological Organization;

(2) The need to establish the benefit/cost implication to Members of elevating an existing Technical Regulation/Manual/Guide to a common Standard, considering the consequences of converting recommendations to compulsory Standards;

(3) The importance of determining cross-cutting elements of proposed common Standards with other WMO documents under the control of different technical commissions or Executive Council panels and working groups requiring action from these bodies following the approval of the common Standard;

Decides that, for each proposed common Standard, the responsible body initiating the proposal should prepare comprehensive supporting documentation that includes:

(1) The benefit/cost implication to Members of submitting an existing Technical Regulation/Manual/Guide for adoption as a common WMO/ISO Standard, considering the consequences of converting recommendations to compulsory standards (from “should” to “shall”) when applicable;

(2) A full description of the cross-cutting elements of the proposed common Standard with other WMO documents under the control of different technical commissions or Executive Council panels and working groups that would lead to a requirement for action from these bodies in the event of the Standard being created. To this end, presidents of technical commissions and Executive Council members are to be informed about potential impacts and invited to register an interest in the document being processed;

(3) An assessment of which elements in the common Standard could create a risk if adopted, and which ones would constitute a risk if omitted or not approved as a common WMO/ISO standard. This risk assessment should be provided with due reference to the AS/NZ 4360:2004 Standard for Risk Management.

_____

ANNEX 2

ISO STANDARDS DEVELOPMENT/APPROVAL STAGES

(as summarized from
https://www.iso.org/stages-and-resources-for-standards-development.html)

Proposal stage (10)

This first step is to confirm that a new International Standard in the subject area is really needed. (See the *Global relevance policy*.) A new work item proposal (NWIP) is submitted to the committee for vote using *Form 4*. The *electronic balloting portal* shall be used for the vote.

The person being nominated as *project leader* is named on the Form.

If there are possible complications around copyright, patents or conformity assessment they should be raised at this early stage.

This stage can be skipped for revisions and amendments to ISO standards that are already published (as long as the scope does not change).

Preparatory stage (20)

Usually a working group (WG) is set up by the parent committee to prepare the working draft (WD). The WG is made up of experts and a Convenor (usually the Project leader).

During this stage, experts continue to look out for issues around copyright, patents and conformity assessment.

Successive WDs can be circulated until the experts are satisfied that they have developed the best solution they can. The draft is then forwarded to the WG's parent committee who will decide which stage to go to next (Committee stage or Enquiry stage).

The ISO/TC platform can be used for sharing documents at this and other stages of standards development.

Committee stage (30)

This stage is optional. For guidance on when it can be skipped see Annex SS of the ISO/IEC Directives Part 1.

During this stage the draft from the working group is shared with the members of the parent committee.

If the committee uses this stage, the committee draft (CD) is circulated to the members of the committee who then comment and vote using the Electronic Balloting Portal. Successive CDs can be circulated until consensus is reached on the technical content.

Enquiry stage (40)

The Draft International Standard (DIS) is submitted to ISO Central Secretariat by the committee secretary. It is then circulated to all ISO members who then have 12 weeks to vote and comment on it. (The submission interface should be used to submit the draft).

The DIS is approved if two-thirds of the P-members of the TC/SC are in favour and not more than one-quarter of the total number of votes cast are negative

If the DIS is approved and no technical changes are introduced in the draft, the project goes straight to publication. However, if technical changes are introduced, FDIS stage is mandatory.

See the ISO/IEC Directives Part 1, 2.6.3 and 4 for more information.

Approval stage (50)

This stage will be automatically skipped if the DIS has been approved and no technical changes are introduced

However, if the draft incorporates technical changes following comments at the DIS stage (even if the DIS has been approved) the FDIS stage becomes mandatory. (See the ISO/IEC Directives Part 1, 2.6.4 for more information.)

If this stage is used, the Final Draft International Standard (FDIS) is submitted to ISO/Central Secretariat (ISO/CS) by the committee secretary. The FDIS is then circulated to all ISO members for an eight-week vote (The Submission Interface should be used when sending the draft to ISO/CS).

The standard is approved if a two-thirds majority of the P-members of the TC/SC is in favour and not more than one-quarter of the total number of votes cast are negative. (See the ISO/IEC Directives Part 1, 2.7 for more information.)

Publication stage (60)

At this stage the secretary submits the final document for publication through the Submission Interface. However, if the standard has passed through the Approval stage, the secretary may submit the project leader's responses to member body comments on the FDIS.

Only editorial corrections are made to the final text. It is published by the ISO Central Secretariat as an International Standard.

_____

World Meteorological Organization

COMMISSION FOR INSTRUMENTS AND METHODS OF OBSERVATION

Seventeenth Session
Amsterdam, the Netherlands, 12 to 16 October 2018

CIMO-17 / INF. 3.4
Submitted by:
Secretary-General
23.VIII.2018

VISION FOR THE FUTURE OF ENVIRONMENTAL MEASUREMENTS

1. Shaping the Vision and Mission

Several new drivers are impacting on WMO and particularly WIGOS, including the opportunity and challenges of Big Data and its myriad of sources, the Minamata Convention, new generation satellites, and the pressing need to be more agile, innovative and informative. The CIMO MG meeting at Offenbach, in April 2016, provided an opportunity to discuss and then formulate the draft of a long term vision and mission of the measurement components of WIGOS. A concise vision, mission, desired outcomes and principle strategies on a page was the result.

At that CIMO MG meeting it was decided to take an agnostic approach to how the mission could be implemented structurally, but whatever structure came to pass it must enhance collaboration and cooperation and promote the role of measurements as an output.

At CIMO TECO 2016 in Madrid in September 2016, with wide representation from a number of other Commissions and Programmes, there was also an opportunity to have a two hour open forum to discuss the vision and mission on a page. There was a general consensus from those present that it had the right form but that it needed some expansion on the drivers and activities that should be pursued to achieve the desired outcomes.

At the CIMO Strategic Planning Meeting in Geneva in June 2017, the draft vision and mission "Future of environmental measurements within WIGOS" was thoroughly revised and updated, taking into account comments received from the presidents of technical commissions, the WIGOS vision document and the current context of the WMO constituent body reform.

At the CIMO MG meeting in Geneva in March 2018, the draft document "Vision for the future of environmental measurements" was finalized and endorsed to be presented to the CIMO-17 session for adoption.

2. Form of the Vision and Mission

This vision and mission is for nearly 25 years (2040) hence is necessarily limited in detail on planning, tactics, goals and concrete data forms, but does focus on ensuring the key elements of achieving fit-for-purpose measurements as a foundation element of environmental intelligence regardless of what the future brings. The concise language was designed to be relatively easy to use as a litmus test for any future work for those developing, enhancing and encouraging measurement practises in support of environmental intelligence.

The foundation of any organization with the aim to be an effective high-quality environmental information service is access to a community of esteemed experts with a fundamental understanding of the science and application of the processes of measurement and its ultimate output: fit-for-purpose data. In the current organizational context of WMO and its priority WIGOS, CIMO is but one of the current Commissions and Programmes involved in developing processes of measurement for the environmental monitoring elements. So under the framework of WIGOS where does the user go for information to find out if a data stream is fit for their purpose? This vision, mission and strategy are not focused on the future of CIMO and is agnostic to there being a CIMO in the future. Rather it is a vision and mission for a strong,

vital, agile and integrated cadre, the WIGOS measurement community, to further the aims of, and be the source of information on all WIGOS measurement data streams.

Hence the vision, mission and strategies stated at the start of this document cannot be just for the existing CIMO community, but should be for the WIGOS measurement community made up of all the relevant current Commissions and partner programmes (for example, GAW, GCW, WCRP, WHYCOS).

3. Overarching new and existing drivers

3.1 Change of focus: Methods to Outputs

The time when a meteorological measurement[1] is primarily a measurement through observation by a human observer is now consigned to history. As has the time when one meteorological datum can be a representative of a quantity with assumed characteristics of assumed quality. Instead, the majority of the measurements used for environmental intelligence are automated, from numerous sources made up of multiple component and processes, and a diverse range of measurement methods and technologies. Furthermore, it is now understood by many that metadata associated with a datum is critical to the understanding of the information.

Most importantly there is now a rapid acceleration and divergence in the measurement technologies (for example, instrumentation, data dissemination and amalgamation to provide other measurements) that explicitly requires all involved in the data and information value chain to re-evaluate the methods of standardization from a measurement being represented by instrumentation (for example, satellite, AWS, radar, ceilometer) to the quantity as an output (for example, vertical temperature, vertical wind, temperature and humidity, rainfall, cloud base or aerosol profile).

3.2 Quality and fit-for-purpose

The assignment of the quality of a measurement has always been dependent on being fit for a user's requirements. In the past the focus on making all measurements fit for climate analysis has dominated the measurement regime. That is no longer the case with tiering of networks (for example, climate, weather, aviation), 3rd party data availability, and crowd sourcing. As the methods and sources of the same measurement, for example, 'temperature', become more heterogeneous there is a temptation to use an instrumental method (if known) to estimate the quality through assumptions, rather than finding a quantitative measure based on the facts of the process of measurements. One solution to replacing belief with knowledge for some quantities is traceability[2] where there is a framework of physics and chemistry metrology. However, some existing measurements and new measurements being integrated into the WIGOS framework either require a significant amount of work to achieve traceability (for example, satellite radiances), or have yet to consider traceability (for example, 3rd party data), or where traceability is impracticable (for example, crowd sourcing, camera imagery).

---

[1] **Measurement** - process of experimentally obtaining one or more quantity values that can reasonably be attributed to a quantity.

Note: The use of the word 'observation' or 'observations' has been deliberately avoided as it is a WMO re-definition of the term 'result of a measurement' and sometimes is equated to measurement.

Result of measurement - set of quantity values being attributed to a measurand together with any other available relevant information.

Measurand - quantity intended to be measured.

[2] **Traceability** – property of a measurement result whereby the result can be related to a reference through a documented unbroken chain of calibrations, each contributing to the measurement uncertainty.

Note: It is important to understand that traceability is the property of the result of a measurement not an instrument or laboratory calibration report.

A potential substitute where traceability is not feasible, is a combination of meta data and ancillary co-located reference measurements that can be used without human interpretation. As a result, to serve the user community, a clear and readily visible source material must be available to provide assurance for the user that the datum or data series they use is fit-for-purpose and will indeed serve their needs.

3.3 Big Data – opportunities and issues

The meteorological community has been at the forefront in contributing to 'Big Data' initially through its rapid take up of space and surface-based remote sensing, and now is actively pursuing 3rd party data sources and crowd sourcing. The volumes are increasing exponentially and have a velocity (speed and direction) unheard of in the past, ultimately providing opportunities for greater insight into the nature of environmental phenomena in increasingly small scales in space and time. However, the down sides are inconsistency in the information content, and particularly how they impact the data quality on information extraction. Perhaps, the most significant issue for the environmental measurement community is to use belief and assumptions rather than understanding and knowledge, largely because the data are loosely related to meta data that provides only a partial description of the measurand, leading to an increase in false conclusions. A mitigation of the risk in some cases can be provided by making sure all the requirements for traceability accompany what was in the past a single datum (for example, a relative humidity value in a SYNOP message). However, in doing so would in turn expand the volume of data for the most basic of quantities by a factor of three as traceability mandates including uncertainty and degrees of freedom.

3.4 The language and integration

Given the focus on integration in WIGOS, does the distribution of activities on measurement standardization and guidance through a number of Commissions and associated agencies make sense for the future? While the CIMO Guide provides a focal point on measurement characteristics and methods, the large number of Commissions tends to lead to well-intentioned duplication and may not be efficiently using the available expertize. Furthermore, linkages between Commissions may not be as effective for communicating user requirements, as each Commission has developed its own vocabulary on processes for measurement. Integration in WIGOS cannot succeed unless all the relevant communities use the same vocabulary with the same semantic intent, and can communicate effectively with the innovators, industry and users. It is of little value, if Commissions' processes of measurement are translated by the CIMO Editorial Board into the international recognized standard vocabulary that remains outside the comprehension of the source community (for example, is it accuracy or uncertainty?). Hence in continuing the implementation of WIGOS there is considerable work to do in standardization of the language of measurement.

4. Strategic elements

The key strategic elements to achieve the Mission and Vision are elaborated in the following paragraphs taking as examples CIMO activities.

(a) Collaborate effectively with users and providers of measurements

The current method of providing focal points for communication and collaboration between the Commissions and Programmes will continue.

The value of TECO and METEOREX/MetExpo in providing a venue to initiate, promote and disseminate methods of measurement has been demonstrated on a number of occasions and must be continued, as well as the partnership with HMEI.

The value in the collaboration with BIPM and associated NMIs has been proven in the last four years and demonstrated at CIMO TECO 2016, and hence the strengthening of the collaboration must be pursued.

The past ECV focus of the CIMO Guide must be re-examined and other user requirements incorporated that enable a user to determine what type of measurement processes are required to achieve a fit-for-purpose result; for example, incorporating aviation requirements and also applications that will achieve fit-for-purpose results from 3rd party and crowd sourced data. These activities would be included in a significant revision of the Annex on Operational Measurement Uncertainty Requirements and Instrument Performance (Annex 1.E) in the CIMO Guide, Part I, Chapter 1.

While there is now a significant volume of the CIMO Guide on space-based (satellite) measurements there have been limited advances in integrating satellite and surface-based data to produce new measurements. In particular the bi-directional utility of downward and upward looking microwave radiometers needs to be investigated as there have been significant advances in surface-based microwave technology.

(b) Develop and promote the implementation of recognized measurement practices

The continuation of intercomparisons is essential to address world-wide operational traceability, like the regular 5-yearly IPCs, and to improve knowledge of the components of uncertainty in the process of measurement (for example, SPICE, screen, ceilometer and radiosonde intercomparisons). Also essential for the sustainment of quality management are the interlaboratory comparisons and training courses for continuing to develop an understanding of the fundamental aspects of good metrology and measurement practise, and they are essential in developing a common vocabulary across measurement disciplines. Promotion of these essential activities needs to be communicated to the highest levels within Member organizations.

Regardless of whether the existing technical commission structures remain or not it is essential that the principles and practices of standardization are promoted by effective liaison, and where required co-development of standards with partner global agencies (ISO, BIPM).

The most recent CIMO TECOs have shown their value in both promoting good measurement practices and introducing new methods for active discussion and dissemination within the measurement community. There is extra benefit from a CIMO TECO when there is participation from other measurement communities (for example, surface meteorology, air chemistry, marine, hydrology and space weather) as new technologies, both instrumental and algorithmic, become visible, and interaction can be direct and immediate. As an example, exploring synergies between the weather radar and satellite communities should be advanced. Hence any future TECO for the WIGOS measurement community must allow for diversity in measurement output, all the while promoting traceability in any new or merged measurement stream.

The provision of competencies for the processes of measurement must continue. While the focus in the past, with good outcomes, has been to provide a competency framework at developing levels of NHMS. The focus in the future should insist on a basic level of understanding of what makes a measurement fit-for-purpose and what is required to sustain operations and outputs.

An understanding of the fundamentals of measurement must be imparted to senior leaders in NMHSs. The dynamic nature of position rotation in NMHSs can lead to incorrect decision making by the use of belief or assumptions rather than being based on a knowledge of measurement fundamentals.

(c) Develop, and provide effective standards and guidance material

The CIMO Guide and other WIGOS documentation are dynamic documents that need to be updated as knowledge improves. IOM reports (or their equivalent) are an effective way to document investigations, technical findings and new methods of measurements, must remain an integral part of the WIGOS measurement community's outputs, and in particular, documents that delineate the transition from research to operations for products based on new measurements.

The liaison with BIPM and collaboration with ISO are fundamental pathways to the development of standards and guidance materials and it is essential that collaboration pathways are utilised effectively and strengthen where needed.

As in strategic element (a), the Annex on Operational Measurement Uncertainty Requirements and Instrument Performance (Annex 1.E) of the Part I, Chapter 1 of the regular revision of the CIMO Guide (or its equivalent) is a key to access existing and new standards and guidance.

The impact of the future updates to the JCGM 100: Evaluation of measurement data - Guide to the Expression of Uncertainty of Measurement (so called ISO GUM) is of particular concern as the methodology of calculating measurement uncertainties moves from the calculus of variances to a Bayesian probability distribution framework. The environmental measurement community has significantly benefited, including financially, from the introduction of ISO GUM as a key component of good measurement practice. Specific guidance material needs to be developed to ensure that these benefits are not only secured but even enhanced, in spite of the perceived complexities of the new approach for computing measurement uncertainties.

The work of the Regional Instrument Centres, both of the atmospheric and marine variants, must continue as should increasing the collaboration on the propagation of traceability with the atmospheric chemistry calibration centres. While likely to be difficult, if a suitable measurement culture exists, the role of the Regional Instrument Centres and their client base should be expanded to include active and passive remote sensing measurements when methods of traceability to SI become available for those measurement types.

Continuing to link an operational measurement to a physical or chemical definition of a quantity needs to continue. For example: one phenomena in particular, clouds, has proven to be difficult; determining physical definitions of cloud base height, cloud amount and type has been started recently to come up with definition to allow traceability and this must be progressed. Similarly, the standards associated with soil moisture and evaporation will need to be developed and propagated.

The positive impact of effective guidance material on the importance of the processes of measurement and supporting infrastructure cannot be underestimated, as shown by the recent initiative of MeteoSwiss on the importance of intercomparisons using the recent International Pyrheliometer Comparison. More visual, concise and to the point material needs to be developed and distributed widely within NMHSs and environmental agencies that are, or will be, providers of 3rd party data. The effectiveness of social media and web-based portals can also assist in providing information to the myriad of potential providers of crowd sourced data.

(d) Provide guidance for the implementation of new measurement technology

Testbeds, Lead Centres, expert teams and Regional Instrument Centres will continue to play a crucial role in transitioning new science to operations. Intercomparisons' primary role has been to provide traceability but they also play a role in introduction of new science and methods on the pathway to operation, and should continue to be used, particularly for the rapidly advancing detector science and engineering used in in situ methods, as well as, passive and active remote sensing.

Measurement community TECO-like fora must continue to be a venue that enables visibility of the new science to be considered for operations. The most recent candidates are: use of infrared all-sky imagery combined with ceilometers to provide cloud height, amount and vertical distribution based on physical processes (for example, radiative transfer), and use of microwave transmissions for communications being used to derive rainfall.

Alternate approaches to increasing the value of new technologies must also be evaluated, including inviting external experts to examine the potential measurement methods for operational use. Benefits can also be expected from a melding in a measurement sense, for example from melding space and surface-based remote streams.

Linkages between WMO agencies and partners that focus on the science behind environmental physical and chemical processes must continue and be strengthened to ensure innovative methods of measurement and associated quantities are developed, and the resultant environmental intelligence can be introduced with confidence by operational service areas. To achieve this the likely attendees of measurement TECO must be expanded further.

(e) Identify and characterize the potential of emerging measurements

When a new or alternative process of measurement is available, to ensure that its potential integration into the future environmental information chain is effective and efficient, the measurand must be critically assessed to determine if it is a traceable quantity, and at what organizational infrastructure cost is required to be fit for purpose for known applications.

If an emerging measurement technology is not traceable then the user community must be made aware. While the resultant data are of significant value, the risks associated with their use must be available for consideration. IOM reports (or their equivalent) and specific reports are ideal vehicles for dissemination to the measurement community, but meta data databases like OSCAR, and short reference publications and handouts need to be developed. Alternative methods to publish measurement knowledge include sponsoring workshops on emerging technologies for operational use and the invitation of an external experts, from a parallel science stream or the NMI community, to provide a relevant perspective.

Once these emerging technologies are used in operations, the character of the measurements must be added to the CIMO Guide as a matter of cause. A focus must be maintained on transitioning measurements from beneficial technologies into operations in a reasonable period of time to ensure effective use of these technologies and positive impacts on operational capability. Other dissemination vehicles include their promotion through innovative award schemes like the Prof. Dr Vilho Vaisala Awards, outreach documentation of the Testbeds and Lead Centres, as well as measurement community TECO.

_____

World Meteorological Organization

COMMISSION FOR INSTRUMENTS AND METHODS OF OBSERVATION

Seventeenth Session
Amsterdam, The Netherlands, 12 to 16 October 2018

CIMO-17/INF. 4.1
Submitted by:
Secretary-General
9.X.2018

PRIORITY ACTIVITIES

General approach

The CIMO Management Group developed the document "Mission, vision, outcomes and strategies for the future of environmental measurements within WIGOS", implementing an agnostic approach to how the vision could be implemented structurally, and aiming at overall enhancement of collaboration and cooperation in promoting the role of measurements.

Most important CIMO activities were identified in the context of the development of the vision document (see also CIMO-17/Doc. 3.4 and CIMO-17/INF. 3.4). Proposal for future activities were sought from all CIMO Expert Teams and Task Teams as inputs to the last session of the Management Group, which then prioritized them.

Contributions from other WMO activities (TCs, RAs, programmes, etc.) were sought subsequently and are presented to CIMO-17 under agenda item 3. These were used to confirm the main priorities identified in the context of the vision. It appears that the Management Group had well identified the general requirements of other WMO commissions and programmes. Some of the most recurrent areas of interest are the assessment of cheap sensors/instruments/systems and alternative technologies, as well as collaboration on standardization.

The context of the WMO governance reform

The CIMO Management Group recognized that the governance reform would require significant work to contribute to the development of the new technical commission structure, and working mechanism, as well as to prepare and effect the transition in a smooth manner.

The Management Group identified major areas of work for which there is an ongoing requirement for work to be performed in the future, and for which expert teams are being established. It also identified a number of topics that could significantly contribute to the implementation of WIGOS and that could be completed within a couple of years. Such topics are proposed to be given higher priorities, towards completing them preferably prior to the restructuring.

The major areas of work cover surface observations, upper-air observations, metrology and radiation references, weather radar and aircraft-based observations, capacity development and CIMO Editorial Board. The topics that could be dealt as priorities and completed within a few years include:

(a) Update of the siting classification scheme, in collaboration with ISO, taking into account experience made by Members in implementing it, and the outcomes of the recent studies assessing the impacts of the surrounding on the measurement uncertainties.

(b) The assessment of the overall measurement uncertainties to eliminate ambiguities, and possible conflicting guidance provided by different WMO publications, such as in OSCAR, the Rolling Review of Requirements, the Guide to Meteorological Instrument and Methods of Observations, and the uncertainties specified by

manufacturers in promoting equipment. This would further support the project on the AWS tender specifications carried out in collaboration with HMEI.

(c) Transition to Automation, preferably in collaboration with CBS, to provide strategic considerations and short guidance modules for managers in envisaging a transition and the impact it has on the whole data value chain.

(d) Conduction of a major intercomparison.

Instrument Intercomparisons

Organizing large instrument intercomparisons require significant resources (human and/or financial, (from the Members as well as from the Secretariat). Therefore embarking on such projects should be carefully assessed, and embarked on only when a Member, or a group of Members, offers to take the lead in the organization, data analysis and report preparation. In the absence of such commitment, there are large risks that the data evaluation and publication of the report could be significantly delayed, which reduces largely the value of the results for Members, and is also not in the interest of the manufacturers supporting the intercomparison.

Considerations on the organization of Conferences

CIMO-TECOs have been regularly organized on a biennial basis and are conducted like scientific conferences, with an open call for contributions and an organizing committee assessing the proposal to develop the conference programme. They are always organized in conjunction with an instrument exhibition, but are not necessarily tied to the organization of a technical commission session.

CIMO-TECOs are attracting a large audience, and are very cost-effective as the vast majority of participants are self-funded. Several CIMO-TECOs have been organized in partnership with the private sector for a mutual benefit. They have also acted as a facilitator for other conferences and meetings to be organized simultaneously, from within WMO, as well as outside, like meetings of relevant ISO working groups, and meetings of the metrology community.

They are seen as a flagship activity of CIMO. Participants rate them very positively and expect them to take place on a regular basis.

The participants of International Conference on Automatic Weather Stations in 2017 (ICAWS-2017) held in Offenbach am Main, Germany, from 24 to 26 October 2017, recommended organizing a similar event in 2019, preferably in a location closer to developing countries and with the participation of more manufacturers. Low-cost AWSs, their performances, and the risks associated with their use replacing high-quality instruments, and standardization of AWS performance tests have been mentioned by participants as areas of particular interest.

CIMO Management Group recommended that CIMO does not take the lead in organizing such an event in 2019, but preferred to invite Member countries to take the lead in hosting and organizing it. In this context, it was also recalled that the incentive for organizing such a conference is also largely based on the request of Members for more guidance/training on AWSs.

_____

World Meteorological Organization

COMMISSION FOR INSTRUMENTS AND METHODS OF OBSERVATION

Seventeenth Session
Amsterdam, The Netherlands, 12 to 16 October 2018

CIMO-17/INF. 4.2(1)
Submitted by:
Secretary-General
10.IX.2018

FUTURE WORKING STRUCTURE AND WORK OF THE COMMISSION

CIMO WORKING STRUCTURE

Background

1. The Sixteenth World Meteorological Congress (Cg-16) approved the revised terms of reference of the Commission for Instruments and Methods of Observation, as they had been proposed by CIMO-XV, and the WMO General Regulations were amended accordingly.

2. At its sixteenth session, CIMO recognized that the structure adopted by CIMO-15 had worked quite well and decided to make only minor adjustments to it, to clarify some ambiguities and to enable the Commission to be more efficient. It also decided not to propose modifications to the Terms of Reference of the Commission.

3. The WMO Executive Council (EC) at its seventieth session adopted Resolution 36 (EC-70) concerning WMO Constituent Bodies Reform Transition Plan and Communication Strategy, and requested presidents of Technical Commissions (TCs) to facilitate the implementation of the resolution through coordinated awareness-raising actions in their respective commissions, including through the agenda of the forthcoming TC sessions. Furthermore, through Recommendations on the WMO Strategic Plan 2020-2023 and the Establishment a new WMO technical commission structure (Recommendation 20 (EC-70) and Recommendation 25 (EC-70), respectively) the technical commissions were requested to adhere to the vision, overarching priorities, long-term goals and strategic objectives set forth in the Strategic Plan and to organize programme activities so as to achieve the expected outcomes.

CIMO Vision and Mission

4. At its fourteenth session in 2016, the CIMO Management Group recognised the increasingly rapid pace of development of new, cheap, alternative observing technologies and their measurement data (for example, crowd-sourced data from mobile phones), the need for WMO to become more actively engaged with commercial entities in the acquisition of observational data, and that the Eighteenth World Meteorological Congress (Cg-18) is likely to bring about a major reconfiguration of the WMO technical commission structure. Accordingly, it spent much of the following year re-examining and redefining the CIMO Vision and Mission, examining the appropriateness of CIMO's existing Terms of Reference. It ultimately concluded that a new working structure and programme would be required for the next intersessional period that would enable seamless transition to the new WMO technical commission structure post-Cg-18, irrespective of the details of that structure.

5. The Management Group concluded that the existing Terms of Reference of the commission that were approved by Cg-16 remained appropriate and required no amendment. On the other hand, it saw the need to develop a new Vision and Mission statement for the commission, one which captures that which lies at the heart of CIMO's *raison d'etre*, its essence, yet involves no assumptions as to the overall WMO technical commission structure of the future. That draft vision for the future of WMO's environmental measurements is discussed and presented in CIMO-17/Doc. 3.4 and INF. 3.4.

Requirements for a New Commission Structure

6. With regard to a proposed new structure for the commission that would make best use of the human and financial resources available, provide an effective mechanism to respond to new requests/activities needing CIMO's support, and fit optimally with both the new Vision and Mission statement and the new WMO technical commission structure, it had been recognized at a Strategic Management Meeting held in Geneva from 27 to 29 June 2017, and then re-examined and concluded at CIMO Management Group meeting (CIMO MG-15) held in Geneva from 26 to 29 March 2018, that:

(a) The new structure and the experts working in it will need to be agile, adaptable and flexible. They will also need to be impartial and open-minded;

(b) The new structure will need to have the flexibility to create task teams, among others to adapt to emerging needs;

(c) The Commission should again be led by a president and vice-president, acknowledging that, with the proposed restructuring of the WMO technical commissions to come, the leadership may change;

(d) The size of the Management Group should be reduced, both to achieve increased efficiencies and to reduce the financial resources required to conduct face-to-face meetings. While five members might be ideal from an anticipated workload perspective, six would enable optimal regional balance and representation;

(e) Focussed teams have been very effective. It is better to do less work of higher quality, than to have too many activities and produce low-quality results. This is likely to be particularly important during the coming period leading up to and immediately following the proposed WMO technical commission restructure, since during that period it is expected that the primary focus of the Commission would need to be on transition to the new structure rather than its regular work;

(f) The OPAG tier of the CIMO structure was judged not to have added value during the current intersessional period so should be discontinued in the interests of efficiency, with Expert Team chairpersons reporting directly to Management Group;

(g) Establishing an Inter-Programme Expert Team on Operational Weather Radars with CBS had been very successful, so even though it can take time to establish such joint teams with another WMO constituent body, it is worthwhile, as it enables better use of human resources and avoids duplication of work. Aircraft-based observations had been suggested as another area that would benefit from formation of an IPET with CBS for the coming intersessional period, and EC-70 formed such a team, to be governed by CBS but jointly managed by CIMO and CBS;

(h) The Task Team (TT) concept (as evidenced by the performance of the Task Teams on Radiation References, the International Cloud Atlas and Competencies) had been particularly productive during the current intersessional period, so the use of such teams should be continued and extended in the new structure. It was proposed to:

(i) Continue with TT on Radiation References, to address implications of the proposed changes to the radiation references;

(ii) Assign a new Task Team to resolve ambiguities within Annex on *Operational Measurement Uncertainty Requirements and Instrument Performance of the CIMO Guide* (WMO-No. 8, Part I, Chapter 1, Annex 1.E), and between that Annex and uncertainty requirements in WMO Observing Systems Capability Analysis and Review Tool (OSCAR);

(iii) Assign a new Task Team to further develop guidance material on how to implement the siting classification scheme and to improve the standard as required, and to keep under review and develop guidance for a new classification of surface measurement quality;

(iv) Assign a new Task Team to prepare for a WMO international intercomparison of upper air measurement technologies;

(v) Assign a new Task Team to develop guidance for Members on transitioning to automated observing technologies;

(i) The concept of Theme Leaders (TL) had, with the exception of the TL on Radiosonde Performance Monitoring, not been particularly successful in the current intersessional period so the responsibilities of the TL on Radio-Frequency Protection should be transferred to the Management Group members, given the importance of this topic;

(j) The concept of targeted Focal Points has proved difficult to realise, so some improvements in working mechanism are required. In the new CIMO structure one of Management Group member will be appointed as the CIMO Gender Custodian, in line with Decision 55 (EC-70), while other focal points (for example, for Global Cryosphere Watch and for Disaster Risk Reduction) will be appointed based on the need expressed by relevant WMO activities or programmes;

(k) While assigning a representative of each Testbed and Lead Centre to an appropriate Expert Team had helped to improve the communication between these centres and the CIMO community, further improvement is required;

(l) Separation of the work of the Commission into in-situ observations and remote sensing observations had led to a number of ambiguities in respective responsibilities and to an imbalance in respective workloads during the current intersessional period, so the work should in future be divided into surface and upper air observations, as was the case prior to 2010;

(m) WMO international intercomparisons are costly. They should therefore only be envisaged if there is no other way to achieve their desired outcomes. They are in particular justified when there is no clear traceability path from the metrology for a specific type of measurement and when a single country or region cannot accomplish the task;

(n) The boundaries between ET-OIST and ET-DIST, and between ET-ORST and ET-NRST had been fuzzy, so there is limited value in continuing with separate teams for operational and new technologies;

(o) The CIMO Editorial Board mechanism has worked well. In the future, it should be more pro-active at ensuring that all chapters are regularly and entirely reviewed, should take on responsibility for maintaining the International Cloud Atlas, and should be expanded to include a representative of the WIGOS Editorial Board to ensure good synergy between the respective publications;

(p) Establish an expert team to develop capacity building material to teach downwards in the management hierarchy chain and to develop outreach material to teach outwards and upwards in the management hierarchy chain. A particular task to be assigned to this team should be development of e-learning material for members on the implications of transitioning to automation;

(q) CIMO Management Group should work closely in partnership with all the other technical commissions involved in measurements to achieve the strategic goal of having a fit-for-purpose ongoing measurement community under the new technical commission structure.

Proposed Structure of the Commission

7. Based on the above considerations, the Management Group proposed the post-CIMO-17 structure shown diagrammatically in the Annex. The details of this structure are described and presented for CIMO-17 approval in the accompanying CIMO-17/Doc 4.2(1).

CIMO Working Mechanisms

8. The working mechanisms of the Commission employed since CIMO-16, which have involved a progressive increase in the use of regular scheduled teleconferences for expert team and task team meetings, have proven very useful in many cases and have provided a cost-effective means of ensuring effective and economical communication between team members. Continuation of regular teleconferences, at least quarterly, is recommended.

9. Another successful aspect of the working mechanism adopted at CIMO-16 was the availability, before the call for experts was sent out, of draft work plans. This had enabled the Commission's work to commence immediately after CIMO-16 and had enabled the expert teams to more easily accomplish their assigned tasks during the intersessional period.

10. One perceived shortcoming in the previous working arrangements of the Commission was a lack of understanding by some new expert team chairpersons of the WMO governance system and of the Commission's working mechanisms. This weakness could best be addressed in the coming intersessional period by holding a briefing teleconference, or face-to-face meeting, subject to available funds, for all expert team and task team chairpersons soon after CIMO-17.

_____

Annex: 1

ANNEX: TENTATIVE NEW STRUCTURE FOR CIMO

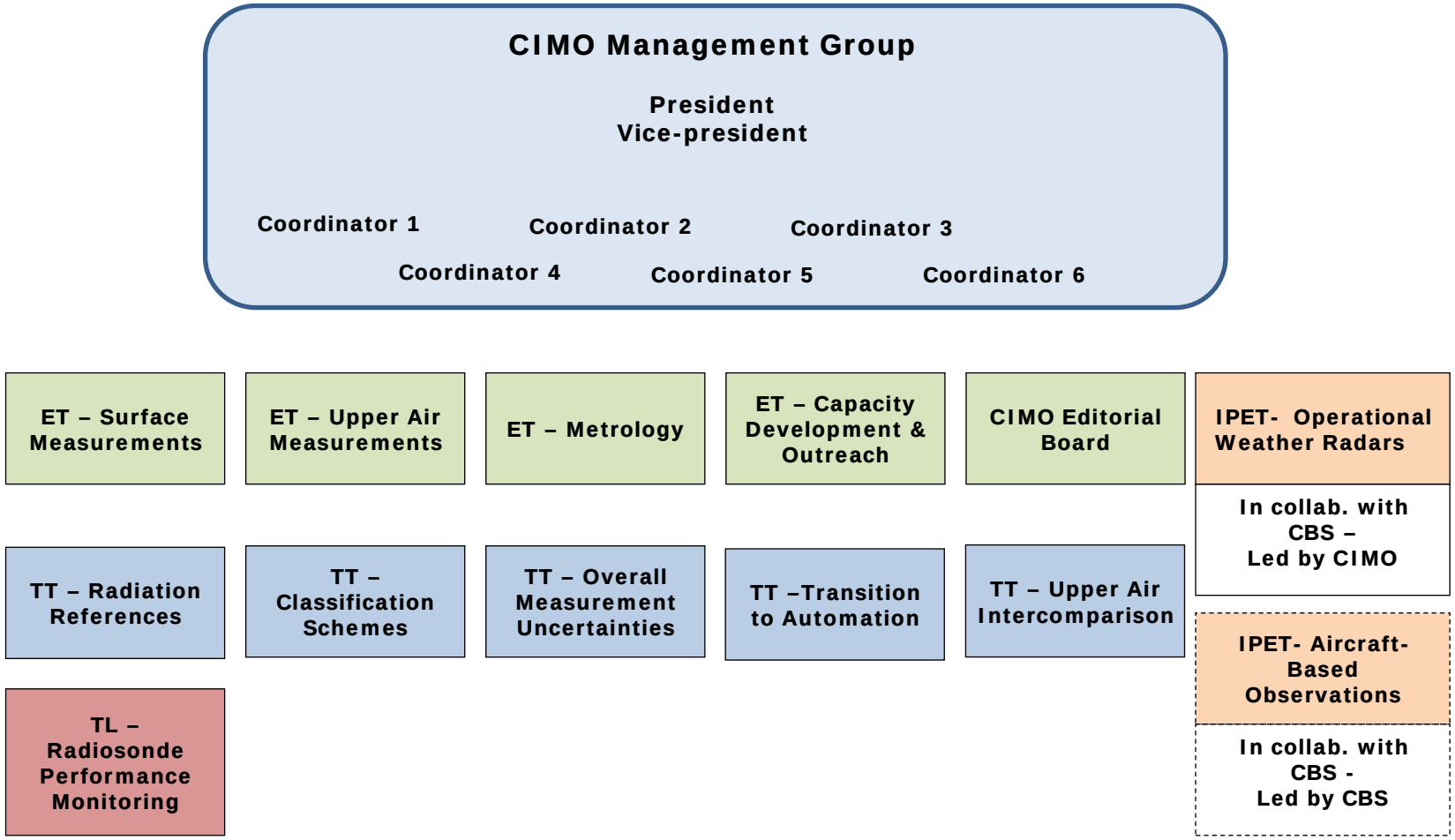

_____

World Meteorological Organization

COMMISSION FOR INSTRUMENTS AND METHODS OF OBSERVATION

Seventeenth Session
Amsterdam, The Netherlands, 12 to 16 October 2018

CIMO-17/INF. 4.2(2)
Submitted by:
Secretary-General
20.VII.2018

GENDER MAINSTREAMING

Statistics on the Participation of Women and Men in CIMO Structures and Activities

Delegates to CIMO Sessions

Table 1 presents the gender composition of delegates to the latest five CIMO sessions, pointing to a very low female representation in the past twenty years. In 1998, only 4 women attended CIMO-XII, accounting for 4% of the total share of delegates. In 2014, their number rose to 8, representing 11% of the total.

CIMO Session	Women %	Men %
XII (1998)	4%	96%
XIII (2002)	4%	96%
XIV (2006)	7%	93%
XV (2010)	8%	92%
16 (2014)	11%	89%

Table 1: Proportion of female and male delegates at CIMO sessions

Figure 1 compares the representation of women and men in delegations to sessions of the eight WMO Technical Commissions. At 11%, women were least represented in the CIMO sessions. Their proportion was more than triple this share at the latest of sessions of JCOMM (37%), CAgM (36%) and CHy (36%).

Figure 1: Proportion of Delegation Members to TC Meetings (as of June 2018)

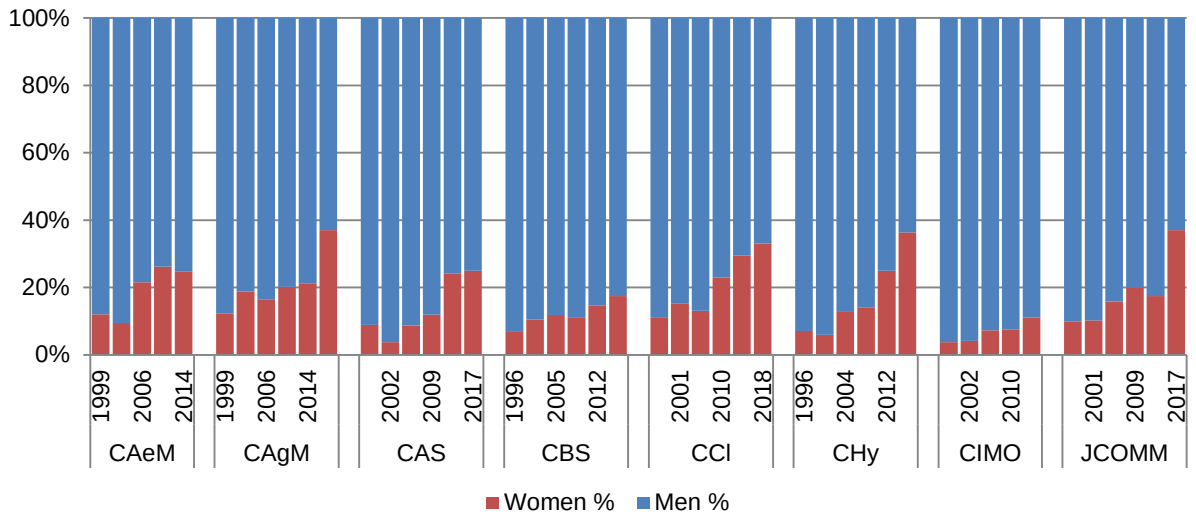

Since 1998, there have been only two to three female principal delegates at CIMO sessions. At the latest meeting in 2014, they accounted for 7% of the total share of principal delegates. This is the lowest proportion in comparison to other TCs, as evident from Figure 2. For comparison, the highest share was registered at CAgM-17 and CHy-15 at 36% and 34%, respectively.

Figure 2: Proportion of Male and Female Principal Delegates to TC Meetings (as of June 2018)

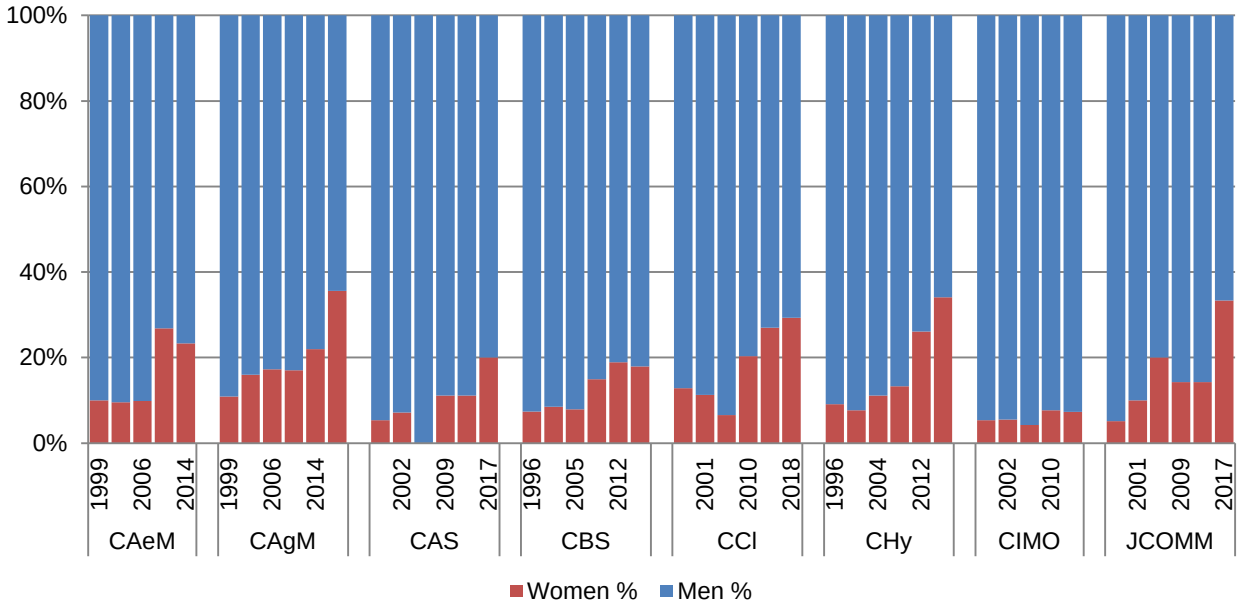

CIMO Management Group

All members of the CIMO Management Group are male.

Women	Men	Total	Women %	Men %
0	10	10	0%	100%

Table 2: Proportion of women and men on CIMO Management Group

Working Groups and Expert Teams

Table 3 presents the proportion of women and men in CIMO working structures (as of March 2018). Eight out of 14 expert/task teams have no female involvement. Women's participation is highest in the Task Team on International Cloud Atlas (33%), the Expert Team on Developments in In-Situ Technologies (29%) and the Inter-Programme Expert Team on Operational Weather Radars (23%).

WG/TT	Women	Men	Total	Women%	Men%
CIMO EdBd	0	3	3	0%	100%
CIMO MG	0	10	10	0%	100%
ET-AO	0	7	7	0%	100%
ET-DIST	2	5	7	29%	71%
ET-II	1	5	6	17%	83%
ET-NRST	0	7	7	0%	100%
ET-OIST	0	9	9	0%	100%
ET-OpMet	1	8	9	11%	89%
ET-ORST	1	11	12	8%	92%
IPET-OWR	5	17	22	23%	77%
TL RFP	0	2	2	0%	100%
TL RPM	0	1	1	0%	100%
TT-Comp	0	6	6	0%	100%
TT-ICA	3	6	9	33%	67%
TT-RadRef	0	5	5	0%	100%
	13	**102**	**115**	**11%**	**89%**

Table 3: Proportion of women and men on CIMO working groups

As compared to other TCs, CIMO has the lowest share of women on its working structures (see Figure 3). Females are best represented on the working groups and expert teams of CAeM and CCl (31%), followed by the Open Panel of CHy Experts (OPACHEs) of which they comprise a third.

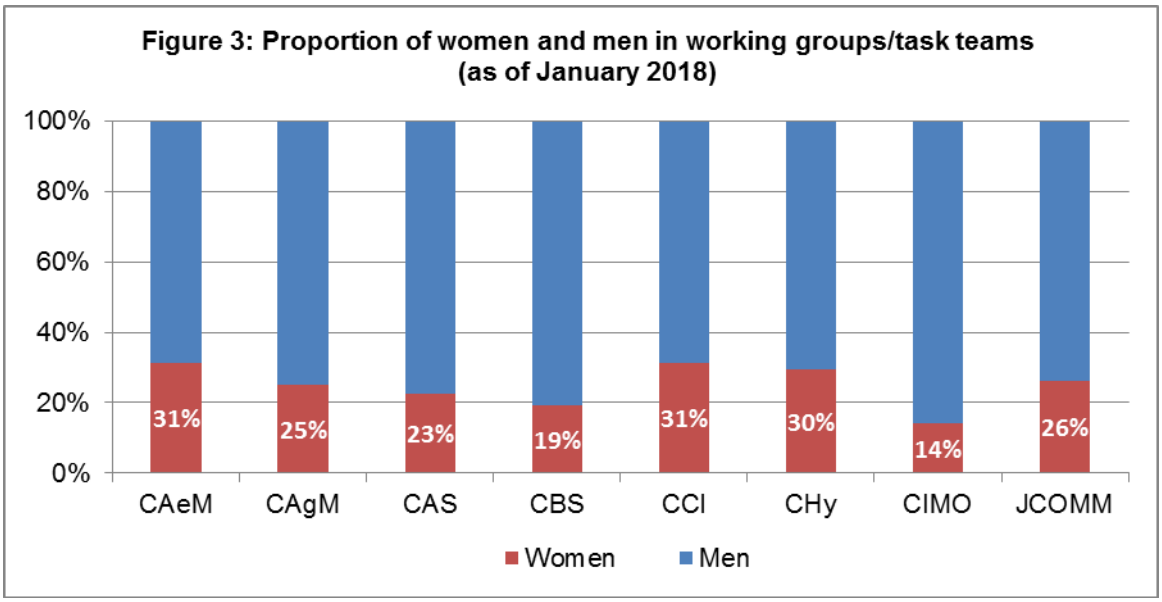

Appointment of Gender Custodians

EC-70 requested TCs and RAs to appoint a member of their management groups to serve as "a gender custodian" at constituent body sessions with the specific task of (a) screening the agenda and documentation, (b) identifying relevant entry points for gender and diversity aspects, (c) ensuring their consideration and discussion, and (d) liaising with the Chair of the Advisory Panel of Experts on Gender Mainstreaming and the Secretariat on a continuous basis (Decision 14/1).

WMO Policy on Gender Equality

The Seventeenth World Meteorological Congress (Cg-17) adopted Resolution 59 (Cg-17) on Gender Equality and Empowerment of Women which requests WMO technical commissions and regional associations:

(a) To develop action plans on implementation of the WMO Policy on Gender Equality within their areas of responsibility;

(b) To continue compiling statistics on the participation of men and women in their work;

(c) To take action on the outcomes and recommendations of the Conference on the Gender Dimensions of Weather and Climate Services;

(d) To report to the Executive Council and the World Meteorological Congress on progress.

Congress further urged Members to take the following actions, among others:

(a) To nominate more female candidates to other WMO constituent bodies and their working structures as well as to training events and for WMO fellowships;

(b) To nominate more female candidates to participate in the work of technical commissions as members of their management groups as well as members of relevant expert teams, working groups and programmes;

(c) To increase the representation of women in their delegations to WMO constituent body meetings;

(d) To respond to regular surveys on gender equality in WMO and in National Meteorological and Hydrological Services, and designate gender focal points.

As an annex to the Resolution, Congress adopted an updated WMO Policy on Gender Equality which outlines the following roles and responsibilities for technical commissions (paragraph 8.3):

> "The technical commissions should be aware of and implement the WMO Gender Equality Policy within their area of responsibility. Efforts should be made to ensure that <u>a minimum of at least 30 percent of the members of their working structures is female</u> and that this percentage rises progressively within each financial period. The longer-term objective will be to reach parity between male and female members."

Technical commissions are expected to report to the Executive Council on progress at least once during each financial cycle (paragraph 9.2).

EC-68 endorsed a WMO Gender Action Plan (Decision 77 (EC-68)) as well as agreed with the priority actions identified by the EC Advisory Panel of Experts on Gender Mainstreaming for 2016-2019 (marked in red). The document contains a range of actions intended for implementation by WMO constituent bodies, including technical commissions (see Column B of the WMO Gender Action Plan).

Priority actions for constituent bodies include:

(a) Make gender equality a permanent item on agendas and discuss at least once per financial period,

(b) Promote the active role of female delegates in constituent body sessions,

(c) Include a short gender analysis in Strategic Plan 2020-2023,

(d) Maintain the Key Outcomes and KPIs related to gender mainstreaming in OP 2020-2023,

(e) Conduct at least two Women's Leadership Workshops on the margin of constituent body meetings,

(f) Update the WMO Capacity Development Strategy and Implementation Plan with a view to incorporating relevant aspects of the WMO Gender Equality Policy,

(g) Update the WMO Capacity Development Strategy and Implementation Plan with a view to making them more gender-sensitive,

(h) Report to the EC and Cg on progress at least once per financial period.

_____

World Meteorological Organization

COMMISSION FOR INSTRUMENTS AND METHODS OF OBSERVATION

Seventeenth Session
Amsterdam, The Netherlands, 12 to 16 October 2018

CIMO-17 / INF. 5
Submitted by:
Secretary-General
9.X.2018

REVIEW OF PREVIOUS RESOLUTIONS AND RECOMMENDATIONS OF THE COMMISSION AND OF RELEVANT RESOLUTIONS OF THE EXECUTIVE COUNCIL

1. The previous resolutions and recommendations of the Commission that remained in force following CIMO-16 are listed in tables I to IV of the Annex 1 to this document. Also included in those tables are proposed actions in regard to each, and the reasons for those actions.

2. Similarly, table V of the Annex 1 provides a list of those resolutions and decisions of the Executive Council that are of relevance to CIMO and remain in force, with proposed actions.

3. Previous resolutions, recommendations and decisions proposed to be maintained after CIMO-17, are reproduced in Annex 2.

Annex: 1 Suggested action on the resolutions and recommendations adopted prior to the Commission's seventeenth session and still in force;

2 Reproduced text of the previous resolutions, decisions and recommendations proposed to be maintained after CIMO-17.

_____

ANNEX 1

SUGGESTED ACTION ON THE RESOLUTIONS AND RECOMMENDATIONS ADOPTED PRIOR TO COMMISSION'S SEVENTEENTH SESSION AND STILL IN FORCE

I. RESOLUTIONS ADOPTED BY CIMO-16

Res. No.	Title	Suggested action	Comments
1 (CIMO-16)	Working Structure of the Commission for Instruments and Methods of Observation	Not to be kept in force	Obsolete To be replaced by draft Resolution 4.2(1)/1 (CIMO-17)
2 (CIMO-16)	CIMO Open Programme Area Groups	Not to be kept in force	Obsolete OPAGs to be discontinued
3 (CIMO-16)	CIMO Management Group	Not to be kept in force	Obsolete To be replaced by draft Resolution 4.2(1)/2 (CIMO-17)
4 (CIMO-16)	Review of Previous Resolutions and Recommendations of CIMO	Not to be kept in force	Obsolete To be replaced by draft Resolution 5/1 (CIMO-17)

II. RESOLUTIONS ADOPTED PRIOR TO CIMO-16 AND STILL IN FORCE

Res. No.	Title	Suggested action	Comments
1 (CIMO-XV)	Vision Statement of the Commission for Instruments and Methods of Observation	Not to be kept in force	To be replaced by draft Resolution 3.4/1 (CIMO-17)
5 (CIMO-XV)	Generic Terms of Reference of CIMO Testbeds and Lead Centres	To be kept in force	Terms of Reference of Testbeds and Lead Centre are still in force
3 (CIMO-XIV)	Participation of women in the work of the Commission	Not to be kept in force	Obsolete To be replaced by draft Resolution 4.2(2)/1 (CIMO-17)

III. RECOMMENDATIONS ADOPTED BY CIMO-16

Rec. No.	Title	Suggested action	Comments
1 (CIMO-16)	Publication and Translation of the *Guide to Meteorological Instruments and Methods of Observation* (WMO-No. 8), 2014 edition	Not to be kept in force	Work completed
2 (CIMO-16)	Recognition of Centennial Observing Stations	Not to be kept in force	Initiative was supported as recommended Not relevant anymore
3 (CIMO-16)	Revision of the *International Cloud Atlas* (WMO-No. 407)	Not to be kept in force	Work completed
4 (CIMO-16)	Review of the resolutions of the Executive Council related to the Commission for Instruments and Methods of Observation	Not to be kept in force	To be replaced by Draft Recommendation 5/1 (CIMO-17)

IV. RECOMMENDATIONS ADOPTED PRIOR TO CIMO-16 AND STILL IN FORCE

Rec. No.	Title	Suggested action	Comments
1 (CIMO-XV)	Regional Instrument Centre Capabilities and Communication with Members	To be kept in force	Ongoing need for improvement of communications of RICs with Members, improvements in traceability, and regular evaluation of RICs
1 (CIMO-XIV)	Measurements in severe icing conditions	Not to be kept in force	Work completed
5 (CIMO-XIV)	Development of UV Calibration Centres	To be kept in force	Ongoing need for the establishment of UV calibration centres and comparison of calibration methodologies
7 (CIMO-XIV)	WRC infrared radiometry section	Not to be kept in force	Governance and traceability of longwave irradiance will be covered by Draft Resolution 2.3(1)/1 (CIMO-17)
9 (CIMO-XIV)	Suitable temperature measurements for high quality reference upper-air stations	Not to be kept in force	Now dealt with in GCOS Reference Upper-Air Network (GRUAN) Manual and Guide
10 (CIMO-XIV)	Usefulness of interoperable upper-air systems	Not to be kept in force	Obsolete

Rec. No.	Title	Suggested action	Comments
1 (CIMO-XII)	Possible conflicts with external standardization organizations	To be kept in force	Ongoing need to coordinate activities to avoid conflicts between standards of WMO and other standardizing bodies
3 (CIMO-XII)	Introduction of new meteorological instruments	Not to be kept in force	Superseded by Climate Monitoring Principles, and now included in WIGOS Guide
4 (CIMO-XI)	Calibration of meteorological and related geophysical instruments	To be kept in force	Ongoing need for development of references for variables where no truly objective definition exists
6 (CIMO-XI)	Improvement of instrumentation used in observing systems of developing countries	Not to be kept in force	Obsolete
8 (CIMO-XI)	Correction of upper-air measurements	Not to be kept in force	Already included in the *CIMO Guide* and *WIGOS Manual*
12 (CIMO-XI)	Education and training for capacity building	Not to be kept in force	Well covered by the *CIMO Guide*
13 (CIMO-XI)	Intercomparisons of instruments	To be kept in force	Ongoing need for organization and collaboration of TCs and RAs on instrument intercomparisons

V. RESOLUTIONS AND DECISIONS OF THE EXECUTIVE COUNCIL RELATED TO THE COMMISSION AND STILL IN FORCE

Res. / Dec.	Title	Suggested action	Comments
Res 13 (EC-XXXIV)	Development and comparison of radiometers	To be kept in force	Includes decision on IPCs
Dec 34 (EC-69)	Translation of the ICA	To be kept in force	Ongoing
Dec 36 (EC-69)	Discontinuity of the Concept of Regional Barometers	Not to be kept in force	Done

_____

ANNEX 2

REPRODUCED TEXT OF THE PREVIOUS RESOLUTIONS, DECISIONS AND RECOMMENDATIONS PROPOSED TO BE MAINTAINED AFTER CIMO-17

Resolution 5 (CIMO-XV)

GENERIC TERMS OF REFERENCE OF CIMO TESTBEDS AND LEAD CENTRES

THE COMMISSION FOR INSTRUMENTS AND METHODS OF OBSERVATION,

Noting:

(1) The request of the Executive Council at its fifty-ninth session for the Commission to identify one or more centres of excellence that would serve as a CIMO Lead Centre for Instrument Development and Testing and to develop terms of reference for such a centre,

(2) The request of the Executive Council at its sixtieth session for the Commission to build the foundations for the future CIMO testbed instrument facility while addressing integration of ground-based remote-sensing and in situ observations as appropriate for future observing networks,

Considering:

(1) The ongoing need for testing and for development of guidance to Members on instrument performances,

(2) The need to establish the principles for the optimal mix of sensing systems to improve both temporal and spatial capabilities for future operational upper-air networks,

(3) The significant contribution of National Meteorological and Hydrological Services with special facilities and expertise towards developing guidance for WMO Members, and their impact on the WMO observing systems,

Recognizing:

(1) That testbeds are centres with experimental facilities to assess the capabilities of various remote-sensing technologies and to provide guidance on remote-sensing instrumentation from a variety of observing systems, such as guidance concerning the optimal distribution of the deployment of new observing systems and the best mix of instruments, or centres for long-term testing of surface in situ observations;

(2) That lead centres are centres of excellence for instrument development and testing that could be focused on a specific parameter;

Decides to adopt the generic terms of references for CIMO testbeds and lead centres as provided in Annexes 1 and 2 to this resolution;

Invites Members to submit further proposals for such testbeds and lead centres including a description of the infrastructure and instrumentation available as well as the proposed main activities of the testbed/lead centre.

_____

Recommendation 1 (CIMO-XV)

REGIONAL INSTRUMENT CENTRE CAPABILITIES AND COMMUNICATION WITH MEMBERS

THE COMMISSION FOR INSTRUMENTS AND METHODS OF OBSERVATION,

Noting:

(1) Recommendation 19 (CIMO-IX) – Establishment of Regional Instrument Centres,

(2) The terms of reference of Regional Instrument Centres (RICs), as published in the *Guide to Meteorological Instruments and Methods of Observations* (WMO-No. 8),

(3) The RICs that were established by regional associations,

(4) The Evaluation Scheme for Regional Instrument Centres,

Recognizing:

(1) The need to improve measurement traceability to the International System of Units (SI) standards in many National Meteorological and Hydrological Services,

(2) That many National Meteorological and Hydrological Services are not aware of the existence of RICs and of the services they can provide,

Considering:

(1) The important role that RICs play in the WMO Integrated Global Observing System to ensure the quality of observed data by providing traceability of measurements to SI standards,

(2) The need for the regular assessment of RICs by a recognized authority to verify their capabilities and performances as requested by the Executive Council at its sixtieth session,

(3) The availability of an Evaluation Scheme for the auditing of Regional Instrument Centres based on the terms of reference of the RICs and on the International Organization for Standardization standard ISO 17025 – General requirements for the competence of testing and calibration laboratories,

Recommends:

(1) That RICs develop websites to improve communication with the Members of their Region, providing information on their capabilities and the services they provide including relevant contact information, and maintain a database of the standards used by the Members of the Region and already calibrated by the RIC;

(2) That RICs, in collaboration with the Commission, develop necessary training and capacity building material and organize training events to improve understanding of traceability of measurements to international standards and implementation of the concept in Regions;

(3) That RICs make regular use of the Evaluation Scheme for Regional Instrument Centres, developed by the Commission, communicate the results to Members of the Region and to the president of the respective regional association to enable the regional association to assess whether the existing RICs meet their stated requirements; and that regional associations inform the Commission whether any capacity-building actions are needed;

(4) That RICs organize regular inter-laboratory comparison between RICs, preferably within their Region, and publish their results on their dedicated websites and on the WMO Website;

Further recommends that regional associations be invited to review the results of the evaluation of their RICs at each session of the regional association.

Recommendation 5 (CIMO-XIV)

DEVELOPMENT OF UV CALIBRATION CENTRES

THE COMMISSISON FOR INSTRUMENTS AND METHODS OF OBSERVATION,

Noting the need to guarantee the quality and traceability of UV measurements,

Considering that there is a need for establishing UV calibration centres, the development of new reference methods, and the need to insure global comparability of UV observations,

Recommends that:

(1) Members seriously consider establishing UV calibration centres;

(2) A comparison of calibration methodologies at calibration centres be undertaken once established;

(3) Such a comparison needs to be coordinated through other relevant WMO Technical Commissions and Programmes and relevant multi-national coordinating bodies.

Recommendation 1 (CIMO-XII)

POSSIBLE CONFLICTS WITH EXTERNAL STANDARDIZATION ORGANIZATIONS

THE COMMISSION FOR INSTRUMENTS AND METHODS OF OBSERVATION,

Noting:

(1) Recommendation 3 (CIMO-XI) - Participation in the Work of the International Organization for Standardization (ISO),

(2) That WMO is developing standards in the form of recommendations for application by Members,

Considering:

(1) Members' active participation in ISO which must continue,

(2) That international organizations outside WMO, such as ISO and regional organizations for standardization, such as the European Committee for Standardization (CEN), are increasingly dealing with matters related to the measurement of meteorological variables,

(3) That the application of such adopted international and regional standards are normally obligatory for Members of such multinational bodies and any conflicting national standards (such as measurement of meteorological variables recommended by WMO) must be withdrawn,

Urges Members to:

(1) Take into account these activities to avoid any conflicts with WMO recommendations by asking their national standard bodies to provide information on relevant activities for developing standards;

(2) Actively participate in the work of the standard bodies concerned to prevent duplication of work and diverging results from WMO's recommendations;

(3) Publicize the work of WMO in the area of meteorological standards and the existence of the Guide to Meteorological Instruments and Methods of Observation as a basic reference for meteorological measurements.

Recommendation 4 (CIMO-XI)

CALIBRATION OF METEOROLOGICAL AND RELATED GEOPHYSICAL INSTRUMENTS

THE COMMISSION FOR INSTRUMENTS AND METHODS OF OBSERVATION,

Noting Resolution 6 (EC-XLII) - Report of the tenth session of the Commission for Instruments and Methods of Observation,

Considering:

(1) The increasing number of automatic weather stations,

(2) The complex sensor instrumentation and algorithms associated with automatic weather stations,

(3) The lack of standards for the calibration of these new types of sensor systems,

Urges Members and WMO Regional Instrument Centres:

(1) To pursue the development of standards for the calibration of advanced sensor instrumentation in response to performance requirements;

(2) To develop interim references for those variables where no truly objective definition exists;

(3) To document and publish such information for possible global application.

Recommendation 13 (CIMO-XI)

INTERCOMPARISONS OF INSTRUMENTS

THE COMMISSION FOR INSTRUMENTS AND METHODS OF OBSERVATION,

Noting:

(1) The terms of reference of CIMO as laid down in the WMO General Regulations, Annex III (Basic Documents, No. I, 1991 edition, WMO-No. 15),

(2) Resolution 4 (Cg-XI) - Instruments and Methods of Observation Programme,

(3) Resolution 6 (EC-XLII) - Report of the tenth session of the Commission for Instruments and Methods of Observation,

(4) The Instruments and Methods of Observation Programme of the WMO Third Long-term Plan,

(5) With appreciation the work already completed or ongoing related to international comparisons of standard pyrheliometers, radiosondes, ozonesondes, automatic digital barometers, wind instruments, present weather sensors/systems and solid precipitation measurements,

Considering:

(1) The importance of intercomparisons to improve the compatibility of measurements made in various countries and, particularly, for the application of data sets for investigations of a global nature for both operational applications and for research programmes of all WMO Programmes,

(2) The usefulness of the intercomparisons already organized and the need for continued intercomparisons of meteorological and related environmental and geophysical instruments and methods of observation,

(3) The need to distribute comparison results for the benefit of instrument and data users as well as manufacturers,

(4) The existence of standard or reference instruments for the field measurements of some meteorological variables,

Recommends that Members should take note of the high value of instrument intercomparisons and should consider participating in and/or hosting intercomparisons;

Invites:

(1) The appropriate technical commissions concerned to collaborate in the organization of intercomparisons;

(2) Regional associations to organize intercomparisons in their region in collaboration with the WMO Secretariat.

Resolution 13 (EC-XXXIV)

DEVELOPMENT AND COMPARISON OF RADIOMETERS

THE EXECUTIVE COMMITTEE,

Noting:

(1) Resolution 12 (EC-XXX) - Development and comparisons of radiometers,

(2) Recommendation 18 (CIMO-VIII) - Revision of resolutions of the Executive Committee based on previous recommendations of the Commission for Instruments and Methods of Observation,

Considering:

(1) That no reliable instrument or satisfactory technique for the accurate measurement or indirect determination of net radiation is at present available,

(2) That new types of sunshine recorder are available,

(3) The progress made in recent years in developing instruments for the operational determination of atmospheric turbidity,

Urges Members:

(1) To develop, as a matter of urgency, a reliable net pyrradiometer which could serve as a standard of reference;

(2) Who have developed net pyrradiometers to carry out detailed systematic investigations in the laboratory, as well as in the field, to study the physical characteristics of the instrument over the full range of wavelengths to which the instrument must respond, their performance (under operational conditions and after various intervals of use), and the effect of the environment on their performance and the stability of their calibration;

(3) To develop an instrument to determine atmospheric turbidity operationally with improved accuracy;

(4) To develop economical, sturdy and sensitive instruments for measuring net radiation, for field use;

(5) To develop improved pyranometers which can be used for the study of solar energy applications;

(6) To continue the work of intercomparison of pyranometers and net pyrradiometers as they are improved and/or new instruments become available;

(7) Who have developed sunshine recorders to undertake comparisons of these with conventional instruments;

Invites regional associations to organize comparisons of pyranometers, in order to improve the accuracy of the network;

Decides that international and regional comparisons of regional and national standard pyrheliometers be organized, if possible, at least every five years.

———

Note: This resolution replaces Resolution 12 (EC-XXX), which is no longer in force.

Decision 34 (EC-69)

TRANSLATION OF THE INTERNATIONAL CLOUD ATLAS (WMO-No. 407)

THE EXECUTIVE COUNCIL,

Recalling Decision 34 (EC-68) – Approval of the new editions of the *International Cloud Atlas* (WMO-No. 407),

Noting that the new edition of the *International Cloud Atlas – Manual on the observation of clouds and other meteors* (WMO-No. 407) was released in the form of a website (https://cloudatlas.wmo.int/home.html) on the occasion of the World Meteorological Day 2017 whose theme was "Understanding Clouds",

Noting also with satisfaction the very large interest shown by Members and the media to this year's World Meteorological Day and the International Cloud Atlas,

Noting further:

(1) That several inquiries on the availability of the Atlas in other WMO languages were received,

(2) That the update of the Atlas was carried out with a very limited budget,

Invites Members to support this effort through voluntary contributions to the CIMO Trust Fund;

Requests the Secretary-General to arrange for translation of the Atlas into official WMO languages using voluntary contributions from Members in support of this effort.

_____